City of Stanwood

Comprehensive Water System Plan

December 2009

Revised June 2010

City of Stanwood Comprehensive Water System Plan

December 2009
Revised June 2010

Mayor
Dianne White

City Council
Conrad Ryer
Timothy Pearce
Clyde "Andy" Chappel
Arne Wennerberg
William "Bill" Carlton
Timothy Loney
H. Leonard Kelley

Utilities Manager
Andrew Bullington

City of Stanwood
10220 270th Street NW
Stanwood, WA 98292

Contact: Andrew Bullington
(360) 629-5323

Prepared by:

RH2 Engineering, Inc.
12100 NE 195th Street, Suite 100
Bothell, WA 98011

Contact: Michele R. Campbell, P.E.
(425) 951-5394

Financial Subconsultant
FCS Group, Inc.
Redmond, WA

Contact: Karyn Johnson
(425) 867-1802

Printed on Recycled Paper

Certification

This Comprehensive Water System Plan for the City of Stanwood was prepared under the direction of the following registered professional engineers.

Richard H. Harbert, P.E.

RICHARD H. HARBERT
STATE OF WASHINGTON
16727
REGISTERED
PROFESSIONAL ENGINEER

11/3/09

Michele R. Campbell, P.E.

MICHELE R. CAMPBELL
STATE OF WASHINGTON
41414
REGISTERED
PROFESSIONAL ENGINEER

11/3/09

City of Stanwood
Comprehensive Water System Plan
Table of Contents

EXECUTIVE SUMMARY

PURPOSE OF THE PLAN ES-1
CHANGES SINCE THE LAST COMPREHENSIVE WATER SYSTEM PLAN ES-1
SUMMARY OF KEY ELEMENTS ES-1
Water Service Area ES-2
Existing Water System ES-2
Past Water Usage ES-4
Future Water Demands and Water Supply ES-5
Water Source and Quality ES-6
Operations and Maintenance ES-7
Water System Evaluation ES-7
Proposed Water System Improvements and Financing Plan ES-8

CHAPTER 1 – INTRODUCTION

WATER SYSTEM OWNERSHIP AND MANAGEMENT 1-1
OVERVIEW OF EXISTING SYSTEM 1-1
AUTHORIZATION AND PURPOSE 1-2
SUMMARY OF PLAN CONTENTS 1-3
DEFINITION OF TERMS 1-4
LIST OF ABBREVIATIONS 1-6

CHAPTER 2 – WATER SYSTEM DESCRIPTION

INTRODUCTION 2-1
WATER SERVICE AREA 2-1
History 2-1
Topography 2-1
Geology 2-1
Water Service Areas 2-2
WATER SERVICE AGREEMENTS 2-2
Water Service Area Agreement 2-2
SATELLITE SYSTEM MANAGEMENT 2-3
EXISTING WATER FACILITIES 2-3
Pressure Zones 2-4
Supply Facilities 2-4
Pump Station Facilities 2-8
Storage Facilities 2-9
Distribution and Transmission System 2-11
Pressure Reducing Stations 2-12
Water System Interties 2-13
Telemetry and Supervisory Control System 2-13
Water System Operation and Control 2-13
ADJACENT WATER SYSTEMS 2-14
Wilderness Ridge Community Club and Northwest Water System 2-14
Warm Beach Water Association 2-15
Warm Beach Conference Grounds 2-15
Sunday Lake Community Club and Silver Springs Estates 2-15

CHAPTER 3 – LAND USE AND POPULATION

INTRODUCTION 3-1
COMPATIBILITY WITH OTHER PLANS 3-1
Introduction 3-1
Growth Management Act 3-1
City of Stanwood Comprehensive Plan 3-2
Snohomish County Comprehensive Plan 3-3

North Snohomish County Coordinated Water System Plan 3-3
LAND USE 3-4
POPULATION 3-4
Household Trends 3-4
Existing and Future Population 3-4

CHAPTER 4 – WATER DEMANDS

INTRODUCTION 4-1
Certificate of Water Availability 4-1
CURRENT POPULATION AND SERVICE CONNECTIONS 4-2
Residential Population Served 4-2
Water Use Classifications 4-2
EXISTING WATER DEMANDS 4-2
Water Consumption 4-2
Water Supply 4-6
Fire Flow Demand 4-16
FUTURE WATER DEMANDS 4-17
Basis for Projecting Demands 4-17
Demand Forecasts and Conservation 4-17

CHAPTER 5 – POLICIES AND DESIGN CRITERIA

INTRODUCTION 5-1
SUPPLY POLICIES 5-2
Quality Protection 5-2
Cross-Connection Control 5-2
Quantity 5-2
Fire Flow 5-2
Water Use Efficiency 5-3
Regional Participation 5-3
CUSTOMER SERVICE POLICIES 5-3
Water Service and Connection 5-3
Annexations 5-4
Temporary Services 5-4
Emergency Service 5-4
Planning Boundaries 5-4
Satellite System Management 5-5
FACILITY POLICIES 5-5
Minimum Standards 5-5
Pressure 5-5
Velocities 5-5
Storage 5-6
Transmission and Distribution 5-6
Supply and Booster Pump Stations 5-8
Pressure Reducing Stations 5-9
Control 5-10
Maintenance 5-10
Reliability 5-10
Vulnerbility 5-11
Joint Use 5-11
FINANCIAL POLICIES 5-11
General 5-11
Connection Charges 5-12
ORGANIZATIONAL POLICIES 5-13
Staffing 5-13
Relationship with Other Departments 5-13

City of Stanwood
Comprehensive Water System Plan
Table of Contents

CHAPTER 6 – WATER SOURCE AND QUALITY

INTRODUCTION 6-1
EXISTING WATER SOURCES AND TREATMENT 6-1
Water Sources 6-1
Water Treatment 6-1
WATER RIGHTS 6-2
Overview 6-2
Existing Water Rights 6-2
Water Rights Evaluation 6-3
Water Rights Planning 6-5
LONG-TERM WATER SUPPLY PLANNING 6-5
DRINKING WATER REGULATIONS 6-5
Overview 6-5
Existing Regulations 6-5
Phase I Rule 6-6
Phase II and IIb Rules 6-7
Phase V Rule 6-7
Surface Water Treatment Rule 6-7
Interim Enhanced Surface Water Treatment Rule 6-7
Long Term 1 Enhanced Surface Water Treatment Rule 6-7
Total Coliform Rule 6-8
Lead and Copper Rule 6-8
Radionuclides Rule 6-9
Wellhead Protection Program 6-9
Consumer Confidence Report 6-10
Stage 1 Disinfectants/Disinfection By-products Rule 6-10
Unregulated Contaminant Monitoring Regulation 6-11
Arsenic 6-11
Filter Backwash Recycling Rule 6-11
Stage 2 Disinfectants/Disinfection By-products Rule 6-12
Long Term 2 Enhanced Surface Water Treatment Rule 6-12
Groundwater Rule 6-13
Future Regulations 6-14
Radon 6-14
Unregulated Contaminant Monitoring Regulation Revisions 6-14
SOURCE WATER QUALITY 6-15
Drinking Water Standards 6-15
Source Monitoring Requirements and Waivers 6-15
Source Monitoring Results 6-16
DISTRIBUTION SYSTEM WATER QUALITY 6-16
Monitoring Requirements and Results 6-16
Coliform Monitoring 6-16
Disinfectant Residual Concentration Monitoring 6-16
Disinfectants/Disinfection By-products Monitoring 6-17
Lead and Copper Monitoring 6-17
Asbestos 6-17

CHAPTER 7 – WATER SYSTEM ANALYSIS

INTRODUCTION 7-1
PRESSURE ZONES 7-1
SOURCE CAPACITY EVALUATION 7-2
Analysis Criteria 7-2
Source Capacity Analysis Results 7-3

City of Stanwood
Comprehensive Water System Plan
Table of Contents

WATER SUPPLY FACILITIES EVALUATION 7-4
Analysis Criteria 7-4
Supply Analysis Results 7-5
297 Zone Facilities 7-5
125 Zone Facilities 7-5
365 Zone Facilities 7-6
Facilities Deficiencies 7-8
STORAGE FACILITIES 7-8
Analysis Criteria 7-8
Storage Analysis Results 7-10
Existing Storage Analysis 7-10
Future Storgae Analysis 7-12
Facility Deficiencies 7-13
DISTRIBUTION AND TRANSMISSION SYSTEM 7-14
Analysis Criteria 7-14
Hydraulic Model 7-14
Description 7-14
Demand Data 7-14
Facilities 7-15
Calibration 7-16
Hydraulic Analysis Results 7-16
Deficiencies 7-19
Pressure Deficiencies 7-19
Fire Flow Deficiencies 7-19
Other Deficiencies 7-20
PRESSURE REDUCING STATIONS 7-20
Evaluation and Deficiencies 7-20
TELEMETRY AND SUPERVISORY SYSTEM 7-21
Evaluation and Deficiencies 7-21
SYSTEM CAPACITY 7-21
Analysis Criteria 7-21
Capacity Analysis Results 7-22

CHAPTER 8 – OPERATIONS AND MAINTENANCE

INTRODUCTION 8-1
NORMAL OPERATIONS 8-1
City Personnel 8-1
Personnel Responsibilities 8-2
Certification of Personnel 8-3
Available Equipment 8-3
Routine Operations 8-4
Continuity of Service 8-5
Routine Water Quality Sampling 8-5
Cross-connection Control 8-5
Recordkeeping and Reporting 8-5
Operations and Maintenance Records 8-7
Safety Procedures and Equipment 8-8
EMERGENCY OPERATIONS 8-9
Capabilities 8-9
Emergency Response Plan 8-10
Public Notification 8-10
PREVENTIVE MAINTENANCE 8-11
STAFFING 8-14
Current Staff 8-14
Recommended Staff Level 8-14

OPERATION AND MAINTENANCE IMPROVEMENTS 8-17

CHAPTER 9 – WATER SYSTEM IMPROVEMENTS

INTRODUCTION 9-1
DESCRIPTION OF IMPROVEMENTS 9-1
Water System Improvements Since the Last Water System Plan 9-2
Water Main Improvements 9-2
Pressure Zone Improvements 9-4
Pressure Reducing Station Improvements 9-6
Facility Improvements 9-7
Miscellaneous Improvements 9-10
Developer Funded Improvements 9-12
ESTIMATING COSTS OF IMPROVEMENTS 9-12
PRIORITIZING IMPROVEMENTS 9-13
Water Main Improvements 9-13
Other Improvement Projects 9-18
SCHEDULE OF IMPROVEMENTS 9-18
Future Project Cost Adjustments 9-18

CHAPTER 10 – FINANCIAL ANALYSIS

INTRODUCTION 10-1
PAST FINANCIAL PERFORMANCE 10-1
CURRENT FINANCIAL STRUCTURE 10-2
Funds 10-3
Financial Policies 10-3
AVAILABLE FUNDING ASSISTANCE AND FINANCING RESOURCES 10-4
Utility Resources 10-4
Outside Sources 10-6
Funding Options Summary 10-9
FUNDING AND FINANCING THE CIP 10-9
REVENUE REQUIREMENS FORECAST 10-10
Cash Test 10-10
Coverage Test 10-10
Financial Forecast 10-11
EXISTING RATE STRUCTURE 10-12
Affordability 10-13
CONCLUSION 10-14

TABLES

Table 1-1 Water System Ownership Informantion 1-1
Table 1-2 2007 Water System Data 1-2
Table 1-3 Abbreviations 1-6
Table 2-1 Supply Facilities Summary 2-5
Table 2-2 Booster Pump Station Facilities Summary 2-8
Table 2-3 Storage Facilities Summery 2-10
Table 2-4 Water Main Diameter Inventory 2-11
Table 2-5 Water Main Material Inventory 2-12
Table 3-1 Population Trends within the City Limits 3-5
Table 3-2 Population Projections with the City Limits 3-6
Table 3-3 Water System Population Projections 3-7
Table 4-1 Average Annual Metered Consumption And Service Connections 4-3
Table 4-2 Multi-Family Connections 4-4
Table 4-3 2009 Largest Water Users 4-6
Table 4-4 Historical Water Supply and System Demand 4-7
Table 4-5 Existing Per Capita Demand 4-8

City of Stanwood
Comprehensive Water System Plan
Table of Contents

Table 4-6 Furture Per Capita Demand Projection 4-9
Table 4-7 2009 Demands by Pressure Zone 4-9
Table 4-8 Distribution System Leakage 4-12
Table 4-9 Equivalent Residential Units 4-13
Table 4-10 Peak Day Demands and Peaking Factors 4-16
Table 4-11 General Planning Level Fire Flow Requirements 4-17
Table 4-12 Future Water Demand Projections 4-18
Table 4-13 Future ERU Projections 4-18
Table 5-1 Regulatory Agencies 5-1
Table 6-1 Existing Water Rights 6-3
Table 6-2 Existing Water Rights Evaluation 6-4
Table 6-3 Future Water Rights Evaluation 6-4
Table 7-1 Minimum and Maximum Distribution System Static Pressures 7-2
Table 7-2 Water Source Capacity Evaluation 7-3
Table 7-3 297 Zone Supply Evaluation 7-5
Table 7-4 125 Zone Supply Evaluation 7-6
Table 7-5 Existing 365 Zone Storage Evaluation 7-7
Table 7-6 365 Zone Supply Evaluation with Cedarhome Reservoir 7-7
Table 7-7 Existing Storage Evaluation 7-11
Table 7-8 Existing Storage Evaluation with Cedarhome Reservoir 7-12
Table 7-9 Future Storage Projections 7-13
Table 7-10 Hydraulic Analyses Operational Conditions 7-15
Table 7-11 Pressure Analysis Summary 7-17
Table 7-12 Fire Flow Analysis Summary 7-18
Table 7-13 Existing System Capacity Analysis with Cedarhome Reservoir 7-23
Table 7-14 System Capacity Analysis with 297 Zone Conversion to 365 Zone 7-24
Table 7-15 Year 2013 System Capacity Analusis with Proposed Improvements 7-25
Table 8-1 Water Department Organization Chart 8-2
Table 8-2 Personnel Certification 8-3
Table 8-3 Equipment List 8-4
Table 8-4 Annual Available Hours per Person 8-15
Table 8-5 Preventive Maintenance Staff Needed 8-16
Table 8-6 Operations Staff Needed 8-17
Table 8-7 Total Staffing Recommendation 8-17
Table 9-1 Improvements Completed Since 2002 9-2
Table 9-2 Water Main Unit Costs 9-13
Table 9-3 Water Main Improvements Priority Ranking Criteria 9-14
Table 9-4 Prioritized Annual Water Main Replacement Projects 9-15
Table 9-5 Proposed Improvements Implementation Schedule 9-19
Table 10-1 Fund Resources and Use Arising from Cash Transactions – Water Operating 10-2
Table 10-2 Fund Resources and Use Arising from Cash Transactions – Water Construction 10-2
Table 10-3 Plant Investment Fee Calculation 10-5
Table 10-4 Plant Investment Fee Charges by Meter Size 10-5
Table 10-5 Capital Funding Plan 10-10
Table 10-6 Revenue Requirements Forecast 2010 through 2015 10-12
Table 10-7 2009 Water Rate Structure 10-13
Table 10-8 Projected Residential Rates and Sample Monthly Bill with Inceases 10-13
Table 10-9 Affordability Test 10-14

City of Stanwood
Comprehensive Water System Plan
Table of Contents

CHARTS

Chart 4-1 2009 Water Connections By Customer Class 4-5
Chart 4-2 2009 Water Consumption By Customer Class 4-5
Chart 4-3 Historical Monthly Water Supply 4-10
Chart 4-4 2009 Monthly Water Supply by Source 4-11
Chart 4-5 Future Water Demand and ERU Projections 4-19
Chart 7-1 Future Water Supply and Demand Projections 7-4

FIGURES

Figure 2-1 Existing Water System
Figure 2-2 Existing System Hydraulic Profile
Figure 2-3 Service Area and Adjacent Systems
Figure 3-1 Land Use
Figure 3-2 Population Projections with City Limits
Figure 9-1 Proposed Water System Improvements
Figure 9-2 Proposed Improvements Hydraulic Profile
Figure J-1 Coliform Monitoring Sites
Figure K-1 Wellhead Protection Areas
Figure M-1 Hydraulic Model Node Diagram

APPENDICES

Appendix A – Retail Water Service Area Agreement
Appendix B – Water System Facilities Data
Appendix C – Water Facilities Inventory (WFI) Form
Appendix D – Consistency Statement Checklist
Appendix E – SEPA Checklist
Appendix F – Water Use Efficiency Program
Appendix G – Cross-Connection Control Program
Appendix H – Water System Construction Standards
Appendix I – Water Rights Information
Appendix J – Water Quality Monitoring Plan
Appendix K – Wellhead Protection Program
Appendix L – Consumer Confidence Report
Appendix M – Hydraulic Model Node Diagram
Appendix N – Water Ordinances
Appendix O – Agency Review Correspondence

Executive Summary

PURPOSE OF THE PLAN

The City of Stanwood's (City) water system is a major infrastructure, much of which is invisible to the customers that receive its water. The water system requires qualified staff to operate and maintain an ongoing capital improvement program to replace old components to meet the requirements mandated by federal and state laws. The primary purpose of the City of Stanwood Comprehensive Water System Plan (WSP) is to identify and schedule water system improvements that correct existing system deficiencies and ensure a safe and reliable supply of water to current and future customers. This WSP complies with Washington State Department of Health (DOH) regulations under WAC 246-290-100, which requires water purveyors to update their water system plans every six years.

CHANGES SINCE THE LAST COMPREHENSIVE WATER SYSTEM PLAN

The City's last Comprehensive Water System Plan was approved by the DOH in 2002. Many changes have occurred since the last update that affect water system planning.

- The requirement to conduct a vulnerability assessment was established when the Public Health Security and Bioterrorism Preparedness and Response Act of 2002 (US H.R.3448) was passed.
- The 2003 Municipal Water Law (2E2SHB 1338) extended water system planning guidelines related to water rights, service area consistency and water use efficiency.
- Drinking water regulations are continually evolving to ensure that water purveyors are providing a safe and reliable water supply to their customers. Additional water quality monitoring requirements and revisions to existing regulations, such as the Groundwater Rule, and Stage 1 and 2 Disinfectants/Disinfection By-products Rule, have been implemented since the last water system plan was completed.

SUMMARY OF KEY ELEMENTS

The WSP presents a description of the existing water system and service area, a forecast of future water demands, policies and design criteria for water system operation and improvements, the operations and maintenance program, staffing requirements, a schedule of improvements and a financial plan to accomplish the improvements. The WSP also includes several ancillary elements that include a water use efficiency plan, a water quality monitoring plan, a wellhead protection plan and a cross-connection control program. A summary of the key issues related to these elements is provided in the following sections.

Water Service Area

The City provides water service to approximately 6,901 people throughout its water service area boundary, which extends beyond the City's corporate limits. The City is responsible for providing public water service, utility management and water system development within this area. However, requests for new water service outside of the Urban Growth Area Boundary will only be granted after the area is annexed to the City.

In 2007, the City served 2,292 customer accounts, which were mainly comprised of single family connections. Single family connections made up 83 percent of all accounts but only consumed 44 percent of all water supplied to the system in 2007.

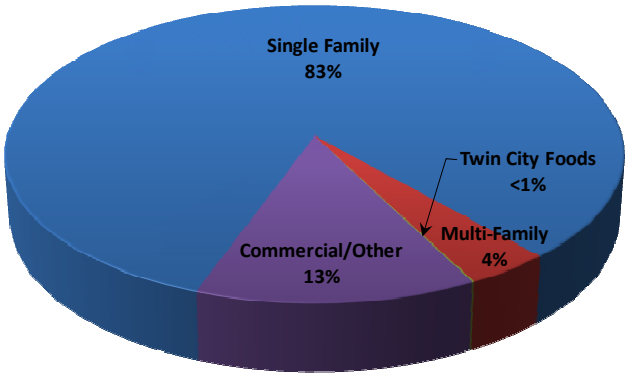

2007 Water Connections

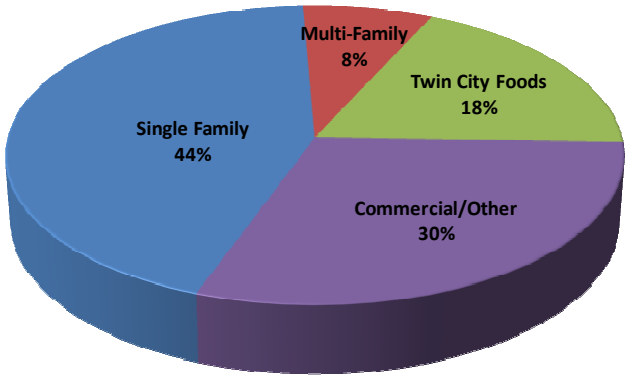

2007 Water Connections

Existing Water System

The City's existing water system was originally established in 1911 by the Stanwood Water Company, which provided water supply to customers from Lake Ketchum. The City purchased the water system in 1986 and now serves its customers with water produced from the Hatt Slough Springs, Bryant Well Nos. 1 and 2, the Fure Well and the City's newest source, the Cedarhome Well. A summary of these sources is shown in **Table ES-1**. All water sources supply the 297 Zone, except for the Hatt Slough Springs, which supplies the 125 Zone.

Table ES-1
Supply Facilities Summary

Well	Pressure Zone	Year Drilled	Existing Pumping Capacity (gpm)	Well Depth (feet)	Well Diameter (inches)	Pump Type	Pump Motor Size (hp)	Water Treatment[2]	Control Facility
Bryant Well No. 1	297 Zone	1948	1,350	250	12	Turbine	75	Cl_2/Mn/H_2S/As	Knittle Tanks
Bryant Well No. 2[1]	297 Zone	1966	350	200	12	Turbine	75	none	Knittle Tanks
Fure Well	297 Zone	1951	100	157	12	Turbine	15	none	Continuous
Hatt Slough Springs	125 Zone	1934	350	n/a	n/a	Centrifugal	10	Cl_2	Continuous
Cedarhome Well	297 Zone	2008	600	490	12 & 16	Turbine	100	Cl_2	Knittle Tanks

1 = Bryant Well No. 2 is scheduled for replacement.

2 = Cl_2: chlorination; Mn: manganese filtration; H_2S: hydrogen sulfide removal; As: arsenic removal.

The City's water system has two storage facilities that are located in the 125 Zone and two that are located in the 297 Zone. A fifth storage facility is currently being constructed and will provide gravity storage to the 365 Zone when completed in fall 2009, as shown in **Table ES-2**.

Table ES-2
Storage Facilities Summary

Reservoir Name	Pressure Zone	Year Constructed	Material	Capacity (MG)	Diameter (feet)	Base Elevation (feet)	Overflow Elevation (feet)	Overall Height (feet)
Knittle No. 1	297 Zone	1990	Concrete	0.20	26	247.0	297.0	50.0
Knittle No. 2	297 Zone	1997	Steel	1.00	61	249.0	297.0	48.0
Cedarhome	365 Zone	2009	Composite	0.55	53	329.5	365.0	35.5
Bailey No. 1	125 Zone	1989	Concrete	0.20	45	108.0	125.0	17.0
Bailey No. 2	125 Zone	1989	Concrete	0.20	45	108.0	125.0	17.0

The City operates three booster pump stations that assist in the transfer of water between pressure zones, as shown in **Table ES-3**. The Bailey Booster Pump Station provides backup supply to the 297 Zone from the 125 Zone. The Cedarhome and Knittle Booster Pump Stations provide a continuous supply of water to the closed 365 Zone until the Cedarhome Reservoir is completed. When the reservoir is completed, the Cedarhome and Knittle Booster Pump Stations will be utilized to fill the Cedarhome Reservoir.

Table ES-3
Booster Pump Station Facilities Summary

Booster Pump Station	Suction Pressure Zone	Discharge Pressure Zone	Year Constructed	Existing Pumping Capacity (gpm)	Number of Pumps	Pump Type	Pump Motor Size (hp)
Bailey BPS	125 Zone	297 Zone	before 1969	800	4	Centrifugal	(4) 15
Cedarhome BPS	297 Zone	365 Zone	2006	1,000	3	Centrifugal	(3) 20
Knittle BPS	297 Zone	365 Zone	1998	1,360	4	Centrifugal	(1) 3, (2) 5, (1) 50

More than 65 miles of water main ranging in size from 1 to 16 inches conveys water from these facilities to water system customers. As shown in **Table ES-4**, most of the water main (approximately one-third) within the service area is 8-inch diameter, and 80 percent of all water main is 8-inch diameter or smaller.

Table ES-4
Water Main Diameter Inventory

Diameter (Inches)	Length (Feet)	% of Total
4 or smaller	110,015	31.8%
6	44,740	12.9%
8	119,278	34.5%
10	11,439	3.3%
12	52,536	15.2%
16	8,173	2.4%
Totals	**346,181**	**100%**

Past Water Usage

In general, the amount of water supplied to the City, or system-wide water demand, has remained relatively steady since 1993, while population has doubled. This is most likely the result of water use efficiency practices, including new buildings with low flow plumbing fixtures and the repair of water system leaks. Twin City Foods likely contributed to the overall decrease in demand since 1997, when the company rebuilt the entire plant to replace the older facility that was lost in a fire in 1996. The rebuilt plant uses water much more efficiently than the pre-fire plant. The City's historical water supply is shown in **Table ES-5**.

Table ES-5
Historical Water Supply and System Demand

Year	Annual Supply (gallons)	Average Daily Demand (gpm)
1992	430,059,600	818
1993	347,541,950	661
1994	342,162,215	651
1995	353,665,000	673
1996	347,018,191	660
1997	360,709,473	686
1998	338,001,593	643
1999	337,599,296	642
2000 [1]	---	---
2001	299,445,937	570
2002	345,569,337	657
2003	354,804,548	675
2004	363,152,529	691
2005	354,672,584	675
2006	373,942,267	711
2007	348,153,898	662

1 = Complete data for 2000 not available.

Future Water Demands and Water Supply

Overall water demand within the City's system is expected to nearly double by the end of the 20-year planning period. The City has sufficient water supply from its existing supply sources to meet the demand requirements of the system until approximately 2020, as shown in **Chart ES-1**. The City plans to meet the future supply needs of the system by transferring the remaining portion of the Sill Well water right to the Cedarhome Well and replacing Bryant Well No. 2. The Hatt Slough Springs will be evaluated to determine the feasibility of increasing production from the springs to add additional supply redundancy to the system.

Chart ES-1
Future Water Demands and Water Supply

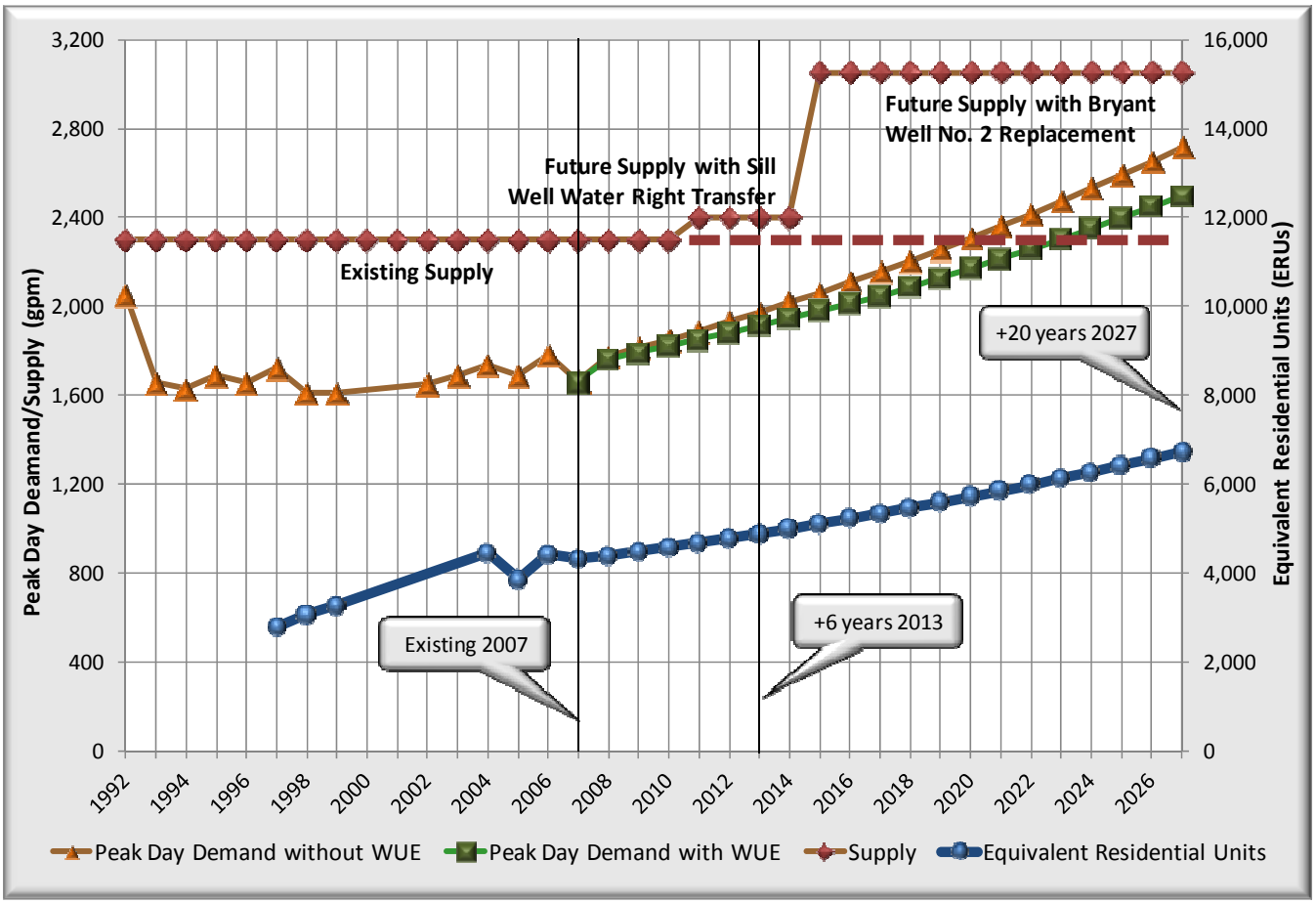

Water Source and Quality

The City's drinking water is supplied by four groundwater wells and one groundwater spring source. The City has historically chlorinated the water only at the Hatt Slough Springs source as a precautionary measure, even though harmful bacteria have never been detected. However, in 2004, DOH determined that a hydraulic connection exists between Bryant Well No. 1 and the nearby surface water source, Church Creek. As a result, the City is now required to provide disinfection at this source. Following the classification of Bryant Well No. 1 as a source under hydraulic connection with surface water, the City constructed the Bryant Well Field Treatment Facility. The Bryant Well Field Treatment Facility chlorinates water produced from Bryant Well No. 1 after it is filtered with greensand media to reduce manganese and arsenic concentrations and is fed ferric chloride and sulfuric acid chemicals to assist with arsenic removal.

The Cedarhome Well was constructed in 2008 and also provides chlorination treatment of the source water. Through the completion of the Bryant Well Field Treatment Facility and the Cedarhome Well, the City has implemented system-wide chlorination.

Groundwater is often fluoridated to assist in the prevention of tooth decay. The City has chosen not to fluoridate its water at this time.

Operations and Maintenance

The City's operations and maintenance organization is staffed by well-qualified, technically trained personnel. City staff regularly participates in safety and training programs to keep abreast of the latest changes in the water industry and to ensure a smooth and safe operation of the water system. The current staff of supervisory personnel and field crew, in which many are responsible for the water system and other utilities, have effectively operated and maintained the water system in the past. However, as the water system expands in the future, additional staff will be required. The City plans to add staff to meet the increased requirements from system expansion as the budget allows.

The City has taken several steps to prepare for emergency situations. A Vulnerability Assessment was developed in accordance with the Public Health Security and Bioterrorism Preparedness and Response Act of 2002. The Emergency Response Plan, which was updated as part of the Vulnerability Assessment, assesses the vulnerability of the major water system facilities during a number of emergency events and identifies follow-up procedures to be carried out. The Emergency Response Plan also includes emergency call-up lists and notification procedures.

Water System Evaluation

The existing water system was evaluated to determine its ability to meet the policies and design criteria of the City and those mandated by DOH. The results of the evaluation are summarized below.

- The City has sufficient water supply to meet the demands of existing customers. However, additional water supply will be required as early as 2020 to meet the projected demands of the system, based on the forecasted population growth.
- The Hatt Slough Springs collection boxes are not watertight, which may make the springs susceptible to contaminants from surface water flow entering the collection boxes.
- The Bailey Booster Pump Station has adequate pumping capacity to meet the demands of the existing system, but it needs structural and equipment improvements.
- The existing reservoirs do not provide enough storage to meet the storage requirements of the existing customers. Pressure zone improvements are necessary to fully utilize all of the existing storage and improve pressures in areas close to the reservoir sites.
- Additional storage will be required in the 125 and 297 Zones in the future to provide sufficient capacity for future customers.
- Several areas of the system require water main replacements to resolve deficiencies related to low fire flows, aging water main and undesirable materials.
- Several pressure reducing stations operate to serve four small pressure zones that lack sufficient supply redundancy. The independent zones need to be consolidated to improve fire flow and supply reliability.
- Several areas of the system have low pressures that do not meet DOH minimum pressure requirements. These areas of the 125 and 297 Zones need to be converted to higher pressure zones.

Proposed Water System Improvements and Financing Plan

Improvements to the water system are necessary, primarily to resolve existing system deficiencies, but also to accommodate the increase in water demands from future growth. Improvements identified for the first six years of the capital improvement program (2010 to 2015) are estimated to cost approximately $5,723,000, which results in an average expenditure of approximately $954,000 per year. Improvements in the following six years (2016 to 2022) are estimated to cost approximately $7,125,000.

The financial analysis is intended to illustrate the feasibility of funding the operation and maintenance and capital improvements recommended for the water system in the next six years. This financial analysis will be supplemented by a water rate study that will be conducted in 2010 to review the City's current financial policies, identify revenue requirements and cost of service, and recommend alternative rate structures that equitably recover the cost of providing service to each type of water customer.

Introduction

1

WATER SYSTEM OWNERSHIP AND MANAGEMENT

The City of Stanwood (City) is a municipal corporation that owns and operates a public water system within its corporate boundaries. Water system data on file at the Department of Health (DOH) for the City's system is shown below in **Table 1-1**.

Table 1-1
Water System Ownership Information

Information Type	Description
System Type	Group A - Community - Public Water System
System Name	City of Stanwood
County	Snohomish
DOH System ID Number	83650H
Owner Number	5635
Address	10220 – 270th Street NW, Stanwood, WA 98292
Contact	Mr. Andrew Bullington, Public Works Director
Contact Phone Number	(360) 629-9781

OVERVIEW OF EXISTING SYSTEM

In 2007, the City provided water service to approximately 2,292 customer connections, or 4,339 equivalent residential units (ERUs), within the City's water service area, which extends beyond the City limits. The City limits comprise an area of approximately 2.7 square miles and the water service area is approximately 22.4 square miles. However, most of the water service area is undeveloped at this time. The 2007 population served by the water system was 6,901, whereas the population residing in the City limits was 5,200.

Four wells and a spring source provide water supply to the City. The City provides system-wide chlorination of its source water, and the new Bryant Well Field Treatment Facility currently treats Bryant Well No. 1 for arsenic, manganese and hydrogen sulfide using an oxidation and filtration process. This facility will also treat the future Bryant Well No. 2 replacement well. Water storage is provided by four reservoirs that have a total capacity of 1.6 million gallons (MG). A fifth reservoir will be completed in fall 2009 that will provide an additional 0.55 MG of storage to the system. In addition, the City's water system has 7 pressure zones with 11 pressure reducing stations, 3 booster pump stations and more than 65 miles of water main. A summary of 2007 water system data is shown in **Table 1-2**.

Table 1-2
2007 Water System Data

Description	Data
Water Service Population	6,901
Water Service Area	22.4 square miles
Total Connections	2,292
Total ERUs	4,339
Demand per ERU	220 gallons per day
Annual Supply	348,153,898 gallons
Average Day Demand	662 gpm
Distribution System Leakage	11%
Peak Day/Average Day Demand Factor	2.51
Peak Hour/Peak Day Demand Factor	1.29
Number of Pressure Zones	7
Number of Wells & Total Capacity	4 (2,400 gpm)
Number of Spring Sources & Total Capacity	1 (350 gpm)
Number of Pump Stations & Total Capacity	3 (3,160 gpm)
Number of Reservoirs & Total Capacity[1]	5 (2.15 MG)
Number of Pressure Reducing Stations	11
Total Length of Water Main	65 miles

1 = Includes Cedarhome Reservoir, scheduled for completion in fall 2009.

AUTHORIZATION AND PURPOSE

In 2007, the City of Stanwood authorized RH2 Engineering, Inc. to prepare a comprehensive water system plan as required by state law under WAC 246-290-100. In accordance with WAC 246-290-100, the plan shall be updated and submitted to DOH every six years. The previous comprehensive water system plan was prepared for the City in 2002. The purpose of this updated Comprehensive Water System Plan (WSP) is as follows:

- To evaluate existing water demand data and project future water demands;
- To analyze the existing water system to determine if it meets minimum requirements mandated by DOH and the City's own policies and design criteria;
- To identify water system improvements that resolve existing system deficiencies and accommodate the system's future needs for at least 20 years into the future;

- To prepare a schedule of improvements that meets the goals of the City's financial program;
- To evaluate past water quality and identify water quality improvements, as necessary;
- To document the City's operations and maintenance program;
- To prepare water use efficiency, cross-connection control, wellhead protection and water quality monitoring plans; and
- To comply with all other water system plan requirements of DOH.

SUMMARY OF PLAN CONTENTS

A brief summary of the content of the chapters in the plan is as follows.

- The **Executive Summary** provides a brief summary of the key elements of this WSP.
- **Chapter 1** introduces the reader to the City's water system, the objectives of the WSP and its organization.
- **Chapter 2** presents the water service area, describes the existing water system and identifies the adjacent water purveyors.
- **Chapter 3** presents related plans, land use and population characteristics.
- **Chapter 4** identifies existing water demands and projected future demands.
- **Chapter 5** presents the City's operational policies and design criteria.
- **Chapter 6** discusses the City's water source and water quality monitoring program.
- **Chapter 7** discusses the water system analyses and existing system deficiencies.
- **Chapter 8** discusses the City's operations and maintenance program.
- **Chapter 9** presents the proposed water system improvements, their estimated costs and implementation schedule.
- **Chapter 10** summarizes the financial status of the water system and presents a plan for funding the water system improvements.
- The **Appendices** contain additional information and plans that supplement the main chapters of the WSP.

DEFINITION OF TERMS

The following terms are used throughout this WSP.

Capital Facilities Charge: A one-time fee paid by a property owner when connecting to the City's water system. This fee pays for the new customers equitable share of the cost of the existing system. This fee offsets the costs of providing water to new customers and recognizes that the existing water system was largely built and paid for by the existing customers.

Consumption: The true volume of water used by the water system's customers. The volume is measured at each customer's connection to the distribution system.

Connection Charge: A one-time fee paid by a property owner when connecting to the City's system that is made up of both the Capital Facilities Charge and the Meter Installation Charge.

Cross-Connection: A physical arrangement that connects a public water system, directly or indirectly, with anything other than another potable water system; therefore, cross-connection presents the potential for contaminating the public water system.

Demand: The quantity of water required from a water supply source over a period of time necessary to meet the needs of domestic, commercial, industrial and public uses, and to provide enough water to supply fire fighting, system losses and miscellaneous water uses. Demands are normally discussed in terms of flow rate, such as million gallons per day (MGD) or gallons per minute (gpm), and are described in terms of a volume of water delivered during a certain time period. Flow rates pertinent to the analysis and design of water systems are:

- **Average Day Demand (ADD):** The total amount of water delivered to the system in a year divided by the number of days in the year;
- **Peak Day Demand (PDD):** The maximum amount of water delivered to the system during a 24-hour time period of a given year; and
- **Peak Hour Demand (PHD):** The maximum amount of water delivered to the system, excluding fire flow, during a one-hour time period of a given year. A systems peak hour demand usually occurs during the same day as the peak day demand.

Distribution System Leakage (DSL): Water that is measured as going into the distribution system but not metered as going out of the system.

Equivalent Residential Units (ERUs): One ERU represents the amount of water used by one single family residence for a specific water system. The demand of other customer classes can be expressed in terms of ERUs by dividing the demand of each of the other customer classes by the demand represented by one ERU.

Fire Flow: The rate of flow of water required during fire fighting, which is usually expressed in terms of gpm.

Head: A measure of pressure or force exerted by water. Head is measured in feet and can be converted to pounds per square inch (psi) by dividing feet by 2.31.

Head Loss: Pressure reduction resulting from pipeline wall friction, bends, physical restrictions or obstructions.

Hydraulic Elevation: The height of a free water surface above a defined datum; the height above the ground to which water in a pressure pipeline would rise in a vertical open-end pipe.

Maximum Contaminant Level (MCL): The maximum permissible level of contaminant in the water that the purveyor delivers to any public water system user, measured at the locations identified under WAC 246-290-300, Table 3.

Meter Installation Charge: The installation charge or hook-up fee is paid by a property owner to reimburse the City for the cost incurred to make the physical connection to the water system. This cost includes both direct and indirect cost for installing the service line off of the system's water main to the customer's water meter.

Potable: Water suitable for human consumption.

Pressure Zone: A portion of the water system that operates from sources at a common hydraulic elevation. For example, the 125 Zone refers to the City's lower pressure zone, which has reservoirs with an overflow elevation of 125 feet.

Purveyor: An agency, subdivision of the state, municipal corporation, firm, company, mutual or cooperative association, institution, partnership, or persons or other entity owning or operating a public water system. Purveyor also means the authorized agents of such entities.

Supply: Water that is delivered to a water system by one or more supply facilities, which may consist of supply stations, booster pump stations, springs and wells.

Storage: Water that is "stored" in a reservoir to supplement the supply facilities of a system and provide water supply for emergency conditions. Storage is broken down into the following five components which are defined and discussed in more detail in **Chapter 7**: operational storage, equalizing storage, standby storage, fire flow storage and dead storage.

LIST OF ABBREVIATIONS

The abbreviations listed **Table 1-3** are used throughout this WSP.

Table 1-3
Abbreviations

Abbreviation	Description
ADD	Average Day Demand
AWWA	American Water Works Association
CCR	Consumer Confidence Report
CIP	Capital Improvement Program
City	City of Stanwood
County	Snohomish County
DBP	Disinfection By-Product
DOH	Department of Health
DSL	Distribution System Leakage
EPA	Environmental Protection Agency
ERU	Equivalent Residential Unit
fps	feet per second
GMA	Growth Management Act
gpm	gallons per minute
MCL	Maximum Contaminant Level
MCLG	Maximum Contaminant Level Goal
MG	Million Gallons
MGD	Million Gallons per Day
mg/l	milligrams per liter
OSHA	Occupational Safety & Health Administration
PDD	Peak Day Demand
PHD	Peak Hour Demand
psi	pounds per square inch
PUD	Snohomish County Public Utility District
SDWA	Safe Drinking Water Act
SOC	Synthetic Organic Chemical
SWTR	Surface Water Treatment Rule
THM	Trihalomethane
UGA	Urban Growth Area
USGS	United States Geological Survey
VOC	Volatile Organic Chemical
WAC	Washington Administrative Code
WISHA	Washington Industrial Safety & Health Act

Water System Description

2

INTRODUCTION

This chapter describes the City of Stanwood's (City) existing and future water service areas and water service agreements, and provides a thorough description of the water system and its individual components. The results of the evaluation and analyses of the existing water system are presented later in **Chapter 7**.

WATER SERVICE AREA

History

The City was settled between 1870 and 1890 and was incorporated in 1903. Stanwood Water Company created the water system in 1911 using Lake Ketchum as its source. The City of Stanwood purchased the water system in 1986 and provided water supply to 2,270 service connections in 2007.

Topography

The topography of the area served by the City varies greatly in elevation. The lowest areas served are located along the Stillaguamish River in western Stanwood and south of the City limits. The flood plains have an elevation between approximately 0 and 4 feet. The highest areas served are located in the vicinity of the City's Knittle and Cedarhome Reservoirs and have an elevation of approximately 250 feet.

Geology

The City's water system is located in the Puget Sound Lowland in an area with a complex geological history. The site conditions at the four production wells are caused by at least two glaciations separated by nonglacial and interglacial periods. Vashon glacial till, a dense mixture of sand, gravel, silt and clay, exists to a depth of 50 to 70 feet below ground surface at all of the City's wells. Below the glacial till is a layer of Vashon advance outwash approximately 60 to 80 feet thick composed of sandy and silty gravel. Fure Well and Hatt Slough Springs appear to withdraw partially from this formation. Pre-Fraser glacial sediments beneath the advance outwash are 50 to 90 feet thick and consist of sand with lenses of hard silt and gravel. Fure Well appears to also partially withdraw water from this formation. The next underlying layer is the pre-Fraser non-glacial deposits composed of fine sand with lenses of silt and clay. The non-glacial deposits are at least 250 feet deep. Fure Well appears to partially withdraw water from this formation, while the Bryant Wells and the Cedarhome Well appear to completely withdraw water through these sediments.

At least two aquifers exist within the City's water service area. An unconfined aquifer contained by the Vashon advance outwash seems to provide water to Fure Well and Hatt Slough Springs. A semi-confined aquifer within the pre-Fraser non-glacial deposits supplies water to the Bryant Wells,

Fure Well and Cedarhome Well. The two aquifers are separated vertically by approximately 260 feet. Additional deeper aquifers may also exist.

Water Service Area

The City of Stanwood is located in north Snohomish County, Washington, north of the mouth of the Stillaguamish River. The City's corporate boundary encompasses an area of approximately 2.7 square miles, as shown in **Figure 2-1**. The City's existing water distribution system extends beyond the City limits, as shown in **Figure 2-1**. The existing water system extends south to the Sylvana Crest Subdivision on the south side of Hatt Slough and north to Drainage District 17 along Old Pacific Highway. The distribution system extends east to 48th Avenue NW (Valde Road) and west to the Stillaguamish River and Skagit Bay. The City's existing retail water service area encompasses an area of approximately 10 square miles and is shown in **Figure 2-3**. The City is responsible for providing public water service, utility management and water system development within this area. However, requests for new water service outside the Urban Growth Area Boundary will only be granted after the area is annexed to the City or upon completion of an annexation agreement.

The City's future water service area boundary was defined in the *1991 North Snohomish County Coordinated Water System Plan* and is also shown in **Figure 2-3**. The future water service area boundary extends 1.6 miles north of Old Pacific Highway and Drainage District 17, east beyond 48th Avenue NW (Valde Road), south past Hatt Slough Springs and west to Skagit Bay. The City's future water service area boundary encompasses an area of approximately 22.4 square miles and extends 1 to 2 miles outside of the existing retail water service area.

The City's existing water rights can be used throughout the defined water service area, per the 2003 Municipal Water Law, once this water system plan showing the service area is approved by the Washington State Department of Health (DOH). According to the Municipal Water Law, the place of use for the City's water rights is defined as the area served. Thus, the City can use their water rights outside of their corporate limits if the use is within the defined service area and all legal requirements defined in RCW 90.03.386(2) have been met. With this WSP, the City is therefore expanding the water right place of use to be the water service area in accordance with the Municipal Water Law. The City's service area is consistent with the legal requirements since the service area does not conflict with other adopted plans or regulations.

WATER SERVICE AGREEMENTS

Water Service Area Agreement

All water purveyors located within a Critical Water Supply Service Area (CWSSA) are required to have a water service area agreement that identifies the external boundary of their water service area. North Snohomish County was declared a CWSSA on October 19, 1988. The City prepared and signed a water service area agreement during the development of the *North Snohomish County Coordinated Water System Plan*, which was finalized in 1991. A copy of the agreement that the City signed in 1991 is contained in **Appendix A**.

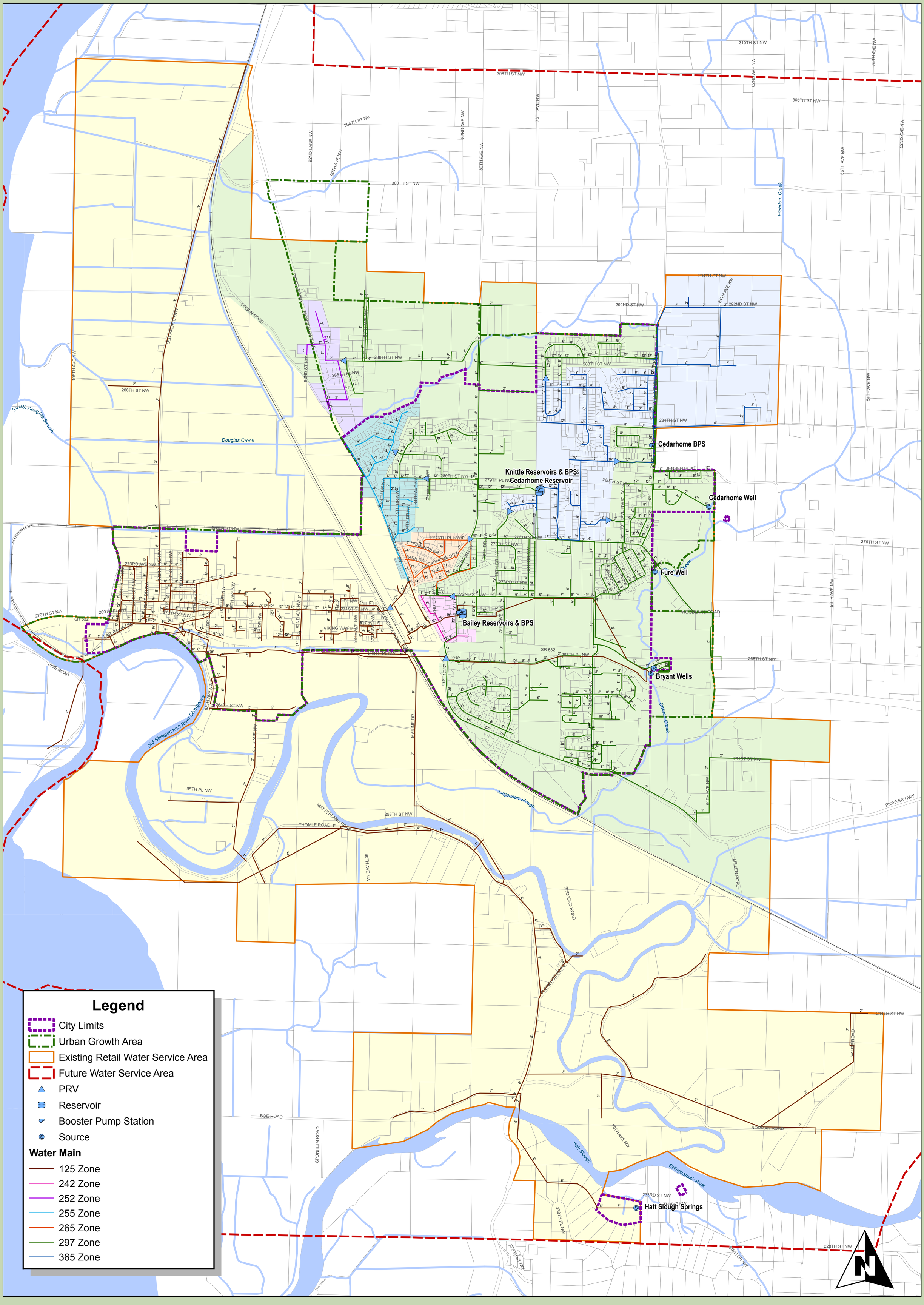

CITY OF STANWOOD
COMPREHENSIVE WATER SYSTEM PLAN

FIGURE 2-1
EXISTING WATER SYSTEM

1 in = 1,000 ft

0 1,000 2,000

DRAWING IS NOT TO SCALE
IF BAR IS NOT 2" LONG

J:\data\STA\107-088\GIS\MAPS\STA-WSP-Fig2-1.mxd DATE REVISED: OCT 2, 2009 BY: MRC

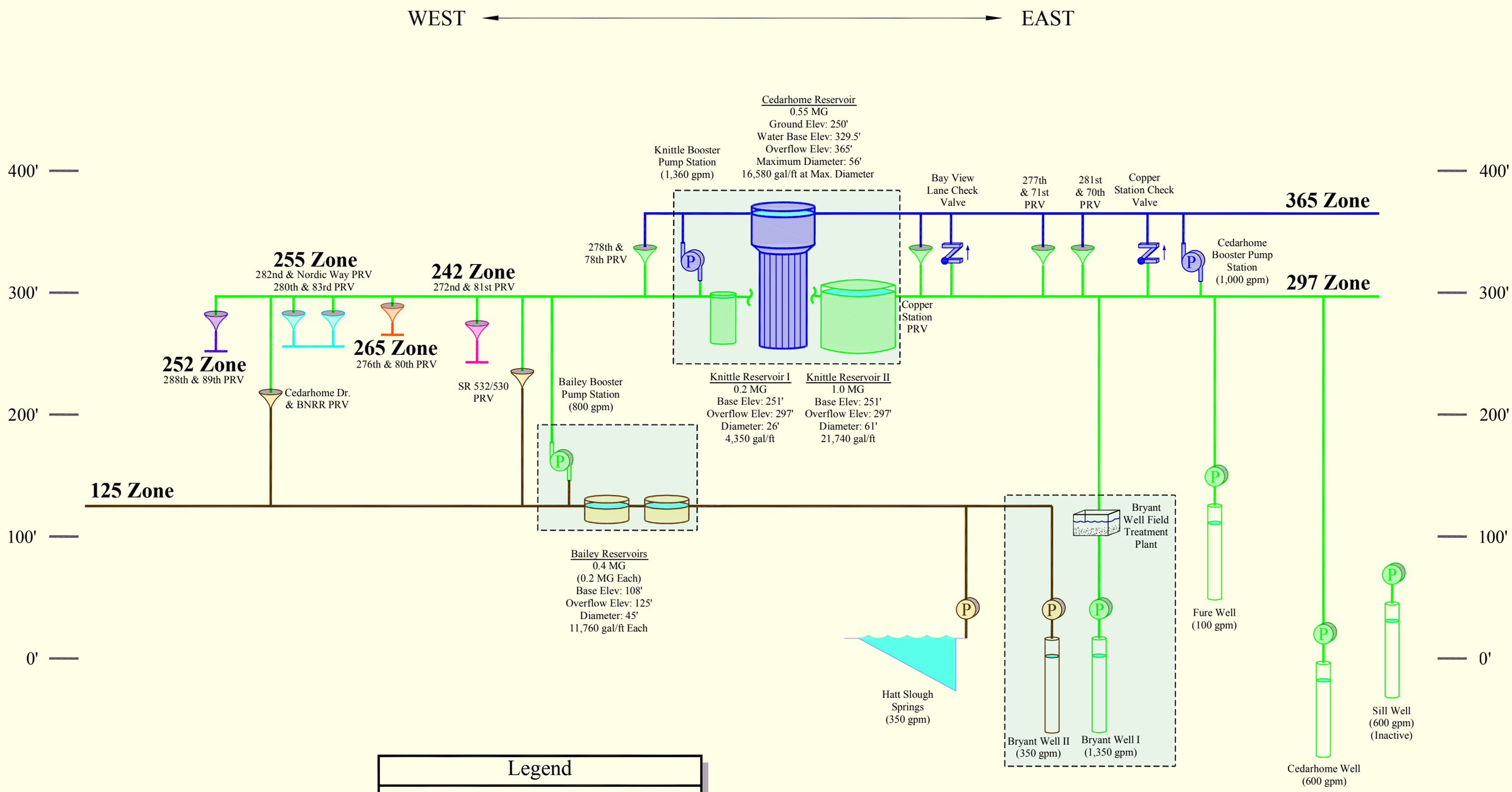

RH2 ENGINEERS PLANNERS SCIENTISTS

CITY OF STANWOOD

Figure 2-2

Existing System Hydraulic Profile

City of Stanwood
Comprehensive Water System Plan

Date: JUL 9, 2009 Filename: STA\107-088\CAD\STA-HPX.DWG

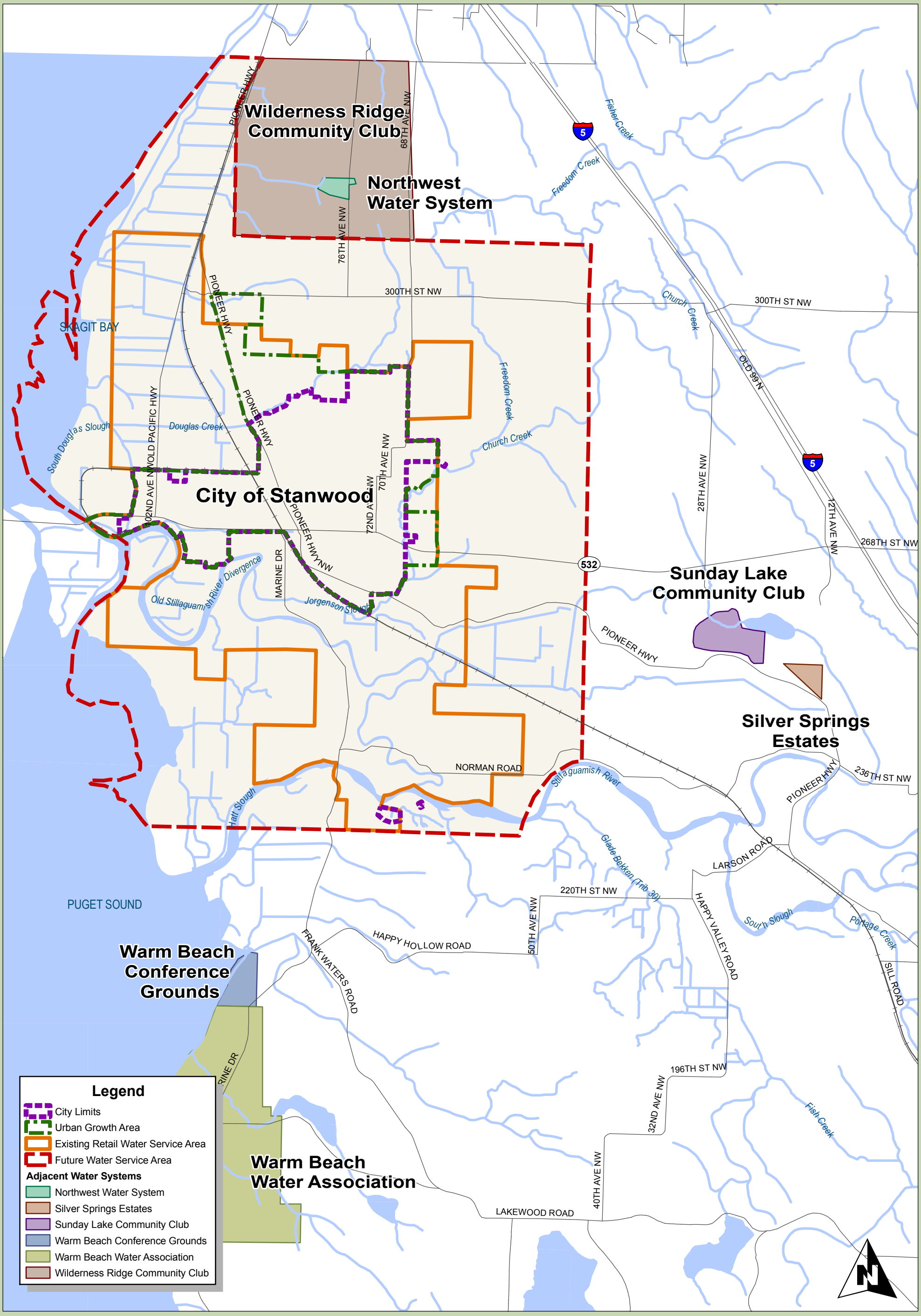

CITY OF STANWOOD
COMPREHENSIVE WATER SYSTEM PLAN

FIGURE 2-3
SERVICE AREA AND ADJACENT SYSTEMS

1 in = 4,000 ft

0 2,000 4,000

DRAWING IS NOT TO SCALE
IF BAR IS NOT 1" LONG

J:\data\STA\107-088\GIS\MAPS\STA-WSP-Fig2-3.mxd DATE REVISED: OCT 2, 2009 BY: MRC

SATELLITE SYSTEM MANAGEMENT

A Satellite System Management Agency (SSMA) is defined as a person or entity that is certified by the Department of Health (DOH) to own or operate more than one public water system without the necessity for a physical connection between such systems. SSMAs were created to stop the proliferation of small water systems, many of which could not meet federal and state water quality and water system planning regulations. Based on the success of SSMAs, DOH made recommendations to the legislature to include rules for designating entities as qualified SSMA's. In July 1995, Senate Bill 5448 became law that governs approvals of new water systems and sets forth requirements for SSMAs. The goal of the law is to ensure that the people of this state will receive safe and reliable water supplies in the future from professionally managed or properly operated water systems. SSMAs can provide three different levels of service:

1. Ownership of the satellite system;
2. Operations and management of the satellite system; or
3. Contract services only.

The service can be provided to new systems, existing systems that are no longer viable or existing systems placed into receivership status by the DOH.

The City does not own or operate any satellite systems and is not currently a SSMA. The City will consider providing satellite system management services to small neighboring water systems and evaluate becoming an SSMA on a case by case basis. Upon agreement between two systems to have the City provide SSMA services, the City will pursue the necessary steps to become an approved SSMA. These include:

- Submitting a notice of intent to DOH;
- Participating in a pre-submittal meeting with DOH;
- Submitting a SSMA plan to DOH that meets the plan requirements; and
- Obtaining approval of the plan from DOH.

If the City decides not to become the SSMA for small systems requesting assistance, then the Snohomish County Public Utility District (PUD) will likely provide these services. Snohomish County PUD currently operates several satellite systems and is an approved SSMA.

EXISTING WATER FACILITIES

This section provides a detailed description of the City's existing water system and the current operation of the facilities. Detailed data on all of the water system facilities is contained in **Appendix B**. General water system facility data is summarized in the Department of Health Water Facilities Inventory (WFI) form. A copy of this form is contained in **Appendix C**. The analysis of the existing water facilities is presented in **Chapter 7**.

Pressure Zones

The City serves customers within an elevation range of approximately sea level, near the shores of Skagit Bay and the Stilliguamish River, to approximately 250 feet near the Knittle and Cedarhome Reservoirs. The wide range of elevations require that the water pressure be increased or reduced to maintain pressures that are safe and sufficient to meet the system's flow requirements. This is achieved in the City's system by dividing the water system into seven distinct pressure zones, as shown in **Figure 2-1**.

The pressures in the 125 and the 297 Zones are regulated by reservoir levels, as illustrated in the hydraulic profile, **Figure 2-2**. Pressures in the 125 Zone, which has a maximum hydraulic elevation of 125 feet, are established by the surface water level in the Bailey Reservoirs. The 125 Zone is primarily located west of Highway 530 in the flood plains. Pressures in the 297 Zone, which has a maximum hydraulic elevation of 297 feet, are established by the surface water level in the Knittle Reservoirs. The 297 Zone is predominately east of Highway 530.

The 365 Zone is a pressure zone without storage, or closed zone, that is currently supplied by the Knittle and Cedarhome Booster Pump Stations. The Cedarhome Reservoir is currently being constructed and is anticipated to be online in the summer of 2009. When completed, the Cedarhome Reservoir will regulate pressures in the 365 Zone, and the Knittle and Cedarhome Booster Pump Stations will be utilized to fill the Cedarhome Reservoir. The 365 Zone, located in the northeast section of the City's retail water service area, serves customers within an elevation range of approximately 175 to 250 feet.

The four smallest pressure zones are supplied by pressure reducing stations with water from the higher pressure zones. The pressure reducing stations decrease the pressure of water that is supplied to services located below the ridge that overlooks Pioneer Highway. The 252 Zone, which is located in the vicinity of Larson Road above Pioneer Highway, has one pressure reducing station that serves customers within an elevation range of approximately 90 to 140 feet. The 255 Zone serves customers in the Pioneer Hills neighborhood and residents southwest of 280th Street and 83rd Drive NW with two pressure reducing stations. The elevation range within the 255 Zone is approximately 25 to 170 feet. The 265 Zone has one pressure reducing station that serves the Hennings Estates development, which has elevations ranging from 55 to 160 feet. Lastly, the 242 Zone encompasses a small area east of the Bailey Reservoirs and west of Pioneer Highway. The 242 Zone is served by one pressure reducing station that delivers water to elevations ranging from approximately 70 to 110 feet.

Supply Facilities

Introduction

All water supply to the City's water system is provided by four groundwater wells in the East Stanwood Aquifer and one groundwater spring source. The City's oldest source of supply, the Hatt Slough Springs, is located south of the City limits on the south side of the Hatt Slough and provides only a small portion of the total water supply to the system. The main source of supply is from the Bryant Wells, located near State Route (SR) 532 and 268th Street NW. However, Bryant Well No. 2 has declined in capacity and is currently planned for replacement. The Cedarhome Well was recently

installed to replace the Sill Well. Fure Well, which is located within the northeast corner of the City limits, provides a small portion of water supply to the system. A summary of the well sources is shown in **Table 2-1**, and a detailed description of each source of supply is provided in the following sections.

Table 2-1
Supply Facilities Summary

Well	Pressure Zone	Year Drilled	Existing Pumping Capacity (gpm)	Well Depth (feet)	Well Diameter (inches)	Pump Type	Pump Motor Size (hp)	Water Treatment[2]	Control Facility
Bryant Well #1	297 Zone	1948	1,350	250	12	Turbine	75	Cl_2/Mn/H_2S/As	Knittle Tanks
Bryant Well #2[1]	297 Zone	1966	350	200	12	Turbine	75	none	Knittle Tanks
Fure Well	297 Zone	1951	100	157	12	Turbine	15	none	Continuous
Hatt Slough Springs	125 Zone	1934	350	n/a	n/a	Centrifugal	10	Cl_2	Continuous
Cedarhome Well	297 Zone	2008	600	490	12 & 16	Turbine	100	Cl_2	Knittle Tanks

1 = Bryant Well #2 is scheduled for replacement.

2 = Cl_2: chlorination; Mn: manganese filtration; H_2S: hydrogen sulfide removal; As: arsenic removal.

Water Treatment

The City transitioned to system-wide chlorination in 2008. The Cedarhome Well, Bryant Well No. 1 and Hatt Slough Springs are currently chlorinated. Chlorination at the Hatt Slough Springs source is being performed as a precautionary measure, even though harmful bacteria have never been detected. The spring source was recently tested and determined not to be under the direct influence of surface water. The Bailey Booster Pump Station is equipped with chlorination equipment for use in an emergency situation. Historically, the water quality at all of the sources has been excellent, aside from slightly higher than allowable manganese levels at Bryant Well No. 1 and Fure Well, and slightly higher than allowable arsenic levels at Bryant Well No. 1 prior to the completion of the Bryant Well Field Treatment Facility.

The Bryant Well Field Treatment Facility currently treats Bryant Well No. 1 for arsenic, manganese and hydrogen sulfide using an oxidation and filtration process. This facility will also treat the future Bryant Well No. 2 replacement well. Three chemicals are initially added to the raw water: sodium hypochlorite, ferric chloride and sulfuric acid. A low strength 0.8 percent sodium hypochlorite solution is created on-site using water, salt and a chemical reactor. The ferric chloride and sulfuric acid are added to assist with arsenic removal and are purchased in 55-gallon drums. All chemicals are injected into the raw water through metering pumps. In addition to feeding chemicals,

Bryant Well Field Treatment Facility

an aeration system adds dissolved oxygen from the ambient air to the raw water to reduce hydrogen sulfide concentrations. After chemical addition, the raw water is filtered through a pressure vessel containing anthracite and greensand media to remove manganese, iron and arsenic compounds. A contact loop is provided after filtration to ensure that chlorine fully reacts with ammonia and reaches breakpoint before the treated water reaches the first customer downstream of the plant.

The Cedarhome Well is equipped with a sodium hypochlorite on-site generation system and a contact loop similar to the Bryant Well Field Treatment Facility. No other chemicals are added to this source.

Chlorination is achieved at Hatt Slough Springs by continuous injection of sodium hypochlorite (liquid chlorine) into the system during operation of the pumps at the facility. The 12.5 percent concentrated sodium hypochlorite solution is created with 1 gallon of sodium hypochlorite per 8 gallons of water. The chlorination equipment at the Hatt Slough Springs and Bailey Booster Pump Station sites consists of a 50-gallon dilution tank and metering pump for the disinfection process.

The Fure Well is not frequently operated because of its limited capacity; therefore, it is not currently chlorinated.

Hatt Slough Springs

The Hatt Slough Springs site is located south of the City limits and Hatt Slough, near the base of a steep slope. The springs are situated on City owned property in an undeveloped area that is accessed by a dirt road from Marine Drive. Four spring collection areas are located within the fenced and secured property. Each collection area has an infiltration piping gallery that delivers water to a 300-gallon settling tank. Water is conveyed by gravity through pipes from each of the settling tanks to the pump building, which houses the mechanical, chlorination and electrical equipment.

The Hatt Slough Springs source was constructed in 1934 and was granted a maximum instantaneous water right of 1,125 gallons per minute (gpm) in 1939. However, the current supply rate of the springs is approximately 350 gpm. The *1992 Comprehensive Water System Plan* questioned the ability of Hatt Slough Springs to continue as a source of supply because of the Environmental Protection Agency's (EPA) Surface Water Treatment Rule. After collecting data between May 1994 and February 1997, DOH concluded that Hatt Slough Springs is a groundwater source that is not under the direct influence of surface water. Water from the springs is pumped through an 8-inch asbestos concrete (AC) transmission main to the Bailey Reservoirs and the 125 Zone with 3 centrifugal pumps and 10 horsepower motors. The City will pursue options to increase the capacity of the spring to fully utilize the water right, as described in **Chapter 9**. Additional data on Hatt Slough Springs and the City's wells is contained in **Appendix B**.

Bryant Wells

The Bryant Well site is located within the City limits near SR 532 and 268th Street NW. The well site is located close to the road in a relatively undeveloped area, on fenced and secured property owned by the City. Each well is housed in a separate building that contains the mechanical, electrical and telemetry equipment.

Bryant Well No. 1 was originally drilled in 1948 and its water right was obtained in 1951. The 12-inch diameter, 250-foot deep well has a current supply rate of approximately 1,350 gpm and a maximum instantaneous water right of 2,000 gpm. However, this water right is shared with Bryant Well No. 2. Bryant Well No. 1 was rehabilitated in 2003 since the well was reaching the end of its design life. Rehabilitation consisted of installing a larger horsepower pump as well as new water main to enable the source to provide water supply directly to the 297 Zone. In 2004, DOH determined that Bryant Well No. 1 is in hydraulic connection with the nearby surface water source, Church Creek and required chlorination of the source water, which is now provided by the Bryant Well Field Treatment Facility.

Bryant Well No. 2 was placed in service in 1966 and shares the Bryant Well No. 1 water right. The 12-inch diameter, 200-foot deep well has been declining in capacity. The well's capacity was approximately 1,000 gpm until 1998, when it decreased to approximately 600 gpm. Since then, the well's capacity has declined severely and has not responded to rehabilitation efforts. The well is not currently being used. The City intends to drill a replacement well for Bryant Well No. 2 to fully utilize the 2,000 gpm water right of both wells. The replacement well will be drilled adjacent to the Bryant Well Field Treatment Facility and will be mixed with water from Bryant Well No. 1 prior to treatment and supply to the 297 Zone.

Fure Well

The Fure Well site is located off of Woodland Road near Church Creek, within the northeast corner of the City limits. The well site is located close to the road in an area that is currently undeveloped, but will likely be developed in the near future. The well is located inside the building that houses the mechanical and electrical equipment.

The Fure Well has a maximum instantaneous water right of 150 gpm, which was obtained in 1951. The current capacity of the 12-inch diameter, 157-foot deep well is approximately 100 gpm. The water is withdrawn from a screened interval between 145 and 150 feet below ground surface. Since the well only penetrates the aquifer by 5 feet, the Fure Well produces a very low yield. The well water is pumped to the 297 Zone with a submersible pump and 15 horsepower motor.

Sill Well and Cedarhome Well

The Sill Well, which is now abandoned, is located near 64th Avenue NW and Church Creek. The well was granted a water right in 1958 for a maximum instantaneous withdrawal of 600 gpm. The 235-foot deep well supplied water to the 297 Zone. However, the well has been disconnected from the system and out of service since 1983, due to high levels of hydrogen sulfide and other problems.

To replace the Sill Will, a new well, the Cedarhome Well, was installed and tested in 1995. The 16-inch diameter, 490-foot deep well is located southeast of

Cedarhome Well Building

the intersection of 68th Avenue NW and Jensen Road in an area surrounded by mostly farmland and school playgrounds. The Cedarhome Well is equipped with a pitless unit and submersible well pump.

The ultimate capacity of the Cedarhome Well is 600 gpm; however, the well is currently limited by the instantaneous water right amount of 500 gpm that was transferred from the Sill Well. To transfer the remaining 100 gpm, the City must complete pump tests to demonstrate that additional withdrawal at this location will not result in an increased risk for seawater intrusion. The City is currently coordinating with the Department of Ecology to transfer the remaining 100 gpm of the Sill Well instantaneous water right to the Cedarhome Well.

Pump Station Facilities

The City's water system has a total of three booster pump stations. The Bailey Booster Pump Station provides backup supply to the 297 Zone from the 125 Zone. The Cedarhome and Knittle Booster Pump Stations provide a continuous supply of water to the closed 365 Zone until the Cedarhome Reservoir is completed in summer 2009. When the reservoir is completed, the Cedarhome and Knittle Booster Pump Stations will be utilized to fill the Cedarhome Reservoir. A summary of the booster pump station facilities is shown in **Table 2-2**, and a detailed description of each facility is provided below. Additional data on the City's pump stations is contained in **Appendix B**.

Table 2-2
Booster Pump Station Facilities Summary

Booster Pump Station	Suction Pressure Zone	Discharge Pressure Zone	Year Constructed	Existing Pumping Capacity (gpm)	Number of Pumps	Pump Type	Pump Motor Size (hp)
Bailey BPS	125 Zone	297 Zone	before 1969	800	4	Centrifugal	(4) 15
Cedarhome BPS	297 Zone	365 Zone	2006	1,000	3	Centrifugal	(3) 20
Knittle BPS	297 Zone	365 Zone	1998	1,360	4	Centrifugal	(1) 3, (2) 5, (1) 50

Bailey Booster Pump Station

The Bailey Booster Pump Station, which is more than 40 years old, is located on 81st Drive NW, within the City limits. The above-grade pump station and adjacent two 0.2-MG tanks are located on property that is owned by the City. The pump station has four centrifugal pumps that are used to pump water that is supplied from the 125 Zone Bailey Reservoirs to the 297 Zone Knittle Reservoirs. Each pump is rated at 200 gpm and powered by a 15 horsepower motor. The pump station does not have standby power or a power receptacle to enable connection of a portable engine generator.

Knittle Booster Pump Station

The Knittle Booster Pump Station, which was constructed in 1998 for the Bay View Lane development, is located north of 276th Street NW on the Knittle Reservoir site. The above-grade pump station and adjacent Knittle Reservoirs are located on property that is owned by the City. The Cedarhome Reservoir is also being constructed on this site. The pump station has four end-suction centrifugal pumps that are used to pump water from the Knittle Reservoirs to the closed 365 Zone. The primary pump is rated at 15 gpm and powered by a 3 horsepower motor. The two lag pumps are rated at 85 gpm and powered by 5 horsepower motors. The fourth pump, which provides fire flow to the 365 Zone, is rated at 1,175 gpm and powered by a 50 horsepower motor.

The Knittle Booster Pump Station is the primary supply facility for the 365 Zone. The Cedarhome Booster Pump Station operates as a backup facility for the zone until the Cedarhome Reservoir is constructed. When the reservoir is complete, the Knittle Booster Pump Station will operate as the lag supply facility for the Cedarhome Reservoir and the 365 Zone. The pump station has a power receptacle to enable connection of a portable engine generator set for backup power supply.

Cedarhome Booster Pump Station

The Cedarhome Booster Pump Station was originally constructed in 1973 and replaced in 2006 with a larger capacity facility. The new above-grade Cedarhome Booster Pump Station is located on the northwest corner of 68th Avenue NW and 282nd Place NW. Three identical, horizontal split case centrifugal pumps powered by 20 horsepower motors provide supply from the 297 Zone to the closed 365 Zone. The three pumps are rated at 500 gpm and operate as lag pumps to the Knittle Booster Pump Station. However, once the Cedarhome Reservoir is completed in summer 2009, the Cedarhome Booster Pump Station will be the primary supply facility for the Cedarhome Reservoir and the 365 Zone. The pump station does not have a power receptacle to enable connection of a portable engine generator set for backup power supply.

Cedarhome BPS Pumps

Storage Facilities

The City's water system has two storage facilities that supply the 125 Zone and two that supply the 297 Zone. A fifth storage facility is currently being constructed and will provide gravity storage to the 365 Zone. A summary of the storage facilities is shown in **Table 2-3**, and a detailed description of each facility is provided below. Additional data on the City's storage facilities is contained in **Appendix B**.

Table 2-3
Storage Facilities Summary

Reservoir Name	Pressure Zone	Year Constructed	Material	Capacity (MG)	Diameter (feet)	Base Elevation (feet)	Overflow Elevation (feet)	Overall Height (feet)
Knittle #1	297 Zone	1990	Concrete	0.20	26	247.0	297.0	50.0
Knittle #2	297 Zone	1997	Steel	1.00	61	249.0	297.0	48.0
Cedarhome	365 Zone	2009	Composite	0.55	53	329.5	365.0	35.5
Bailey #1	125 Zone	1989	Concrete	0.20	45	108.0	125.0	17.0
Bailey #2	125 Zone	1989	Concrete	0.20	45	108.0	125.0	17.0

0.2 MG Knittle Reservoir No. 1

Knittle Reservoir No. 1 is located north of 276th Street NW and Stauffer Road on a dirt road and provides 200,000 gallons of water storage for the 297 Zone. The 26-foot diameter, 50-foot tall concrete tank was constructed in 1990 and provides approximately 4,350 gallons of storage per foot height. A single 12-inch diameter water main serves as the reservoir's common inlet/outlet pipe. The reservoir is anchored for seismic events.

Knittle Reservoirs No. 1 and No.

1.0 MG Knittle Reservoir No. 2

Knittle Reservoir No. 2 is located on the same site as Knittle Reservoir No. 1 and also provides water storage for the 297 Zone. The 61-foot diameter, 48-foot tall steel tank was constructed in 1997 and provides approximately 21,750 gallons of storage per foot height. A single 12-inch diameter water main serves as the reservoir's common inlet/outlet pipe.

0.2 MG Bailey Reservoirs

The 200,000 gallon Bailey Reservoirs are located on 81st Drive NW on the same site as the Bailey Booster Pump Station. The 21-foot diameter, 45-foot tall concrete tanks were constructed in 1989, and each tank provides approximately 11,800 gallons of storage per foot height for the 125 Zone. A single 10-inch diameter water main serves as the reservoirs' common inlet/outlet pipe. The reservoirs are anchored for seismic events.

0.55 MG Cedarhome Reservoir

The 550,000 gallon Cedarhome Reservoir is currently being constructed on the Knittle Reservoir site located north of 276th Street NW and Stauffer Road. The reservoir is expected to be online in summer 2009. The composite elevated tank will have a low water level of 329.5 feet and an overflow elevation of 365 feet. Above an elevation of 339 feet, the reservoir will have a uniform diameter of 53.3 feet and will provide approximately 16,700 gallons of storage per foot height to the 365 Zone. The storage area below 339 feet will be conical and provide a varying volume of water storage capacity per foot height. A single 16-inch diameter water main will serve as the reservoir's common inlet/outlet pipe. The reservoir will be anchored for seismic events.

Cedarhome Reservoir Construction

Distribution and Transmission System

The City's retail water service area contains more than 65 miles of water main ranging in size from 1-inch to 16 inches. As shown in **Table 2-4**, most of the water main (approximately one-third) within the retail water service area is 8-inch diameter, and 80 percent of all water main is 8-inch diameter or smaller.

Table 2-4
Water Main Diameter Inventory

Diameter (Inches)	Length (Feet)	% of Total
4 or smaller	110,015	31.8%
6	44,740	12.9%
8	119,278	34.5%
10	11,439	3.3%
12	52,536	15.2%
16	8,173	2.4%
Totals	**346,181**	**100%**

Most of the water main in the system is asbestos concrete, PVC or ductile iron, as shown in **Table 2-5**. All new water main installations are required to use ductile iron water main in accordance with the City's development and construction standards.

Table 2-5
Water Main Material Inventory

Diameter (Inches)	Length (Feet)	% of Total
Asbestos Cement	80,546	23.3%
Ductile Iron	119,106	34.4%
Galvanized Iron	2,459	0.7%
PVC	113,726	32.9%
Steel	30,344	8.8%
Totals	**346,181**	**100%**

The life expectancy of water main is generally 50 years. Approximately 10 percent of water main within the system is older than 50 years and approximately one-third of the water main is considered to be in fair condition. Fair condition pipe is primarily asbestos cement, steel or galvanized iron. Of particular concern are the older steel pipes located in various parts of the retail water service area, and the old service saddles and service lines in the older part of the City west of Highway 530. The PVC and ductile iron pipes are generally in good or excellent condition.

Pressure Reducing Stations

Pressure reducing stations are connections between adjacent pressure zones that allow water to flow from the higher pressure zone to the lower pressure zone by reducing the pressure of the water as it flows through the station, thereby maintaining a safe range of pressures in the lower zone. A pressure reducing station is essentially a below-grade vault (typically concrete) that normally contains two pressure reducing valves, sometimes a pressure relief valve, piping and other appurtenances. The pressure reducing valve hydraulically varies the flow rate through the valve (up to the flow capacity of the valve) to maintain a constant pressure on the downstream side of the valve for water flowing into the lower pressure zone.

Pressure reducing stations can serve multiple purposes. They can function as an active supply facility by maintaining a continuous supply of water into a lower zone that has no other source of supply, such as a well or reservoir. Pressure reducing stations can also function as standby supply facilities that are normally inactive (no water flowing through them). The operation of this type of station is typically triggered by a drop in water pressure near the downstream side of the station. A typical application of this function is a pressure reducing station that is only needed to supply additional water to a lower zone during a fire flow situation. The pressure setting of the control valve within the station allows it to remain closed during normal system operation and open only during high demand conditions, like fire flows, to provide the additional supply needed.

The City's water system has a total of 11 pressure reducing stations, as shown in profile view in **Figure 2-2**. The SR 532 and Pioneer Highway station is connected between the 297 Zone and the 125 Zone and provides water to the lower zone during fire flow situations. The City's newest

pressure reducing station, located near Cedarhome Drive and BNRR, will not be put into operation until pressure zone improvements in the area are completed. When operating, the pressure reducing station will also serve to supply the 125 Zone during fire flow situations. These pressure zone improvements are described in detail in **Chapter 9**.

Four pressure reducing stations supply water from the 365 Zone to the 297 Zone during fire flow situations. The other five pressure reducing stations actively supply water from the 297 Zone to the four smaller pressure zones. If water was supplied directly from the 297 Zone to these lower zones, high pressure problems would exist. A listing of all pressure reducing stations and related data is contained in **Appendix B**.

Water System Interties

Water system interties are physical connections between two adjacent water systems. Interties are normally separated by a closed isolation valve or control valve. Emergency supply interties provide water from one system to another during emergency situations only. An emergency situation may occur when a water system loses its main source of supply or a major transmission main and is unable to provide a sufficient quantity of water to its customers. Normal supply interties provide water from one system to another during non-emergency situations and are typically supplying water at all times.

The City's water system currently has no interties. However, the *North Snohomish County Coordinated Water System Plan* discusses possible interties connecting the City with the Arlington and Tatoosh water systems. Other interties that the City may consider include the City of Everett, Snohomish County PUD and Skagit County PUD. However, the most viable sources are Tatoosh and Everett. The City may also supply water to Camano Island due to aquifer limitations and salt-water intrusion on Camano Island if excess supply was available.

Telemetry and Supervisory Control System

Successful operation of any municipal water system requires gathering and using accurate water system information. A telemetry and supervisory control system gathers information and can efficiently control a system by automatically optimizing facility operations. A telemetry and supervisory control system also provides instant alarm notification to operations personnel in the event of equipment failure, operation problem, fire or other emergency situations.

The City's telemetry and supervisory control system consists of a radio based SCADA system that was upgraded in 2003 by RH2 Engineering. Each of the City's water facilities are monitored through programmable logic controllers connected to a Human Machine Interface (HMI) computer. Alarms generated by the SCADA system are transmitted to the staff by phone using dedicated alarm systems. Daily data from the SCADA system is continuously collected on the HMI computer system. Operators can view real time or historical HMI data.

Water System Operation and Control

The 125 Zone is supplied with water from the Hatt Slough Springs. The Hatt Slough Springs is a continuous supply source to the 125 Zone and the Bailey Reservoirs. The SR 532 and Pioneer

Highway PRV does not normally supply water, but is set to flow water to the 125 Zone upon a suppressed level in the Bailey Reservoirs or during a localized drop in pressure, such as during a fire flow. The Bailey Booster Pump Station is operated manually to transfer water from the Bailey Reservoirs to the Knittle Reservoirs as needed to maintain adequate 297 Zone reservoir levels.

The City's main source of supply, the Bryant Wells, supplies water to the Knittle Reservoirs and the 297 Zone. The Cedarhome Well also supplies the 297 Zone. The operation of the Bryant and Cedarhome Wells is controlled by the water levels in the Knittle Reservoirs. The 297 Zone is also supplied with water from the Fure Well and the Bailey Booster Pump Station. The Fure Well currently operates at a rate of approximately 100 gpm continuously to supply water to the Knittle Reservoirs. The 242, 252, 255, and 265 Zones also receive water from the 297 Zone through five active pressure reducing stations.

The 365 Zone is a closed zone (i.e. no storage) and is continuously supplied with water from the 297 Zone through the Cedarhome and Knittle Booster Pump Stations. One or more pumps in the Knittle Booster Pump Station runs continuously to maintain a near constant pressure in the 365 Zone. The Cedarhome Booster Pump Station and the fire flow pump in the Knittle Booster Pump Station operate upon a reduced pressure in the zone or when the demand is beyond that of the smaller domestic supply pumps. When the Cedarhome Reservoir is completed in summer 2009, the water level in the reservoir will control the operation of the Cedarhome and Knittle Booster Pump Stations.

ADJACENT WATER SYSTEMS

The area outside and immediately adjacent to the City's future water service area is unincorporated Snohomish County. Most of the water systems located close to the City are relatively small. Some of the larger systems in Snohomish County include the City of Arlington, located approximately 14 miles east of Stanwood and the City of Marysville, located approximately 20 miles southeast of Stanwood. A few small community water systems are located on northeast Camano Island, which is approximately 1 mile west of Stanwood. Six small water systems located adjacent or close to the City's future water service area boundary are shown in **Figure 2-3**. A brief description of each water system follows.

Wilderness Ridge Community Club and Northwest Water System

The Wilderness Ridge Community Club water system is located north of the City's future water service area boundary. The Wilderness Ridge system has approximately 284 service connections. Water is supplied to the system by two groundwater wells that are currently untreated. The Northwest Water System is a smaller public water system that is located within the Wilderness Ridge water system boundary. The Northwest Water System has 35 service connections and water is supplied by two groundwater wells. There are no current plans for interties between either of these two systems and the City's water system

Warm Beach Water Association

The Warm Beach Water Association water system is located south of the City's future water service area. The system has approximately 500 service connections. Three groundwater wells provide water to the system. There are no current plans for interties between this system and the City's water system.

Warm Beach Conference Grounds

The Warm Beach Conference Grounds water system is located near the Warm Beach Water Association system, also south of the City's future water service area. The Warm Beach Conference Grounds water system provides service to approximately 551 service connections with six groundwater wells. There are no current plans for interties between the two systems.

Sunday Lake Community Club and Silver Springs Estates

The Sunday Lake Community Club and the Silver Springs Estates are independent water systems located approximately 1 to 2 miles east of the City's future water service area. The Sunday Lake Community Club has approximately 74 water service connections and Silver Springs Estates has approximately 24 water service connections. Three wells provide water to the Sunday Lake Community Club, which is owned and operated by the Snohomish County PUD. One well provides water to the Silver Springs Estates. There are no current plans for interties between either of these two systems and the City's water system.

Land Use and Population

3

INTRODUCTION

The City of Stanwood's (City) *Comprehensive Plan* was originally prepared in 1995 and was last updated in April 2007. The plan was developed to meet the requirements of the State of Washington Growth Management Act (GMA). The GMA requires, among other things, consistency between land use and utility plans and their implementation. This chapter demonstrates the compatibility of the City's Comprehensive Water System Plan (WSP) with other plans, identifies the designated land uses within the existing and future service area, and presents population projections within the City's planning area.

COMPATIBILITY WITH OTHER PLANS

Introduction

To ensure that the WSP is consistent with the land use policies that guide it and other related plans, the following planning documents were examined.

- Growth Management Act
- *City of Stanwood Comprehensive Plan*
- *Snohomish County Comprehensive Plan*
- *North Snohomish County Coordinated Water System Plan*

Growth Management Act

The State of Washington GMA of 1990 (and its multiple amendments) defined four goals relevant to this water WSP.

1. Growth should be in urban areas;
2. There should be consistency between land use and utility plans and their implementation;
3. There should be concurrency of growth with public facilities and services; and
4. Critical areas should be designated and protected.

Urban Growth Area

The GMA requires that Snohomish County (County) and the City cooperate in designating an Urban Growth Area (UGA). As part of the development of its *1995 Comprehensive Plan*, the City designated an UGA that would accommodate the City's projected population growth and projected growth within the unincorporated portion of the UGA. Since this time, the City has modified its UGA. The current UGA is shown in **Figure 3-1.**

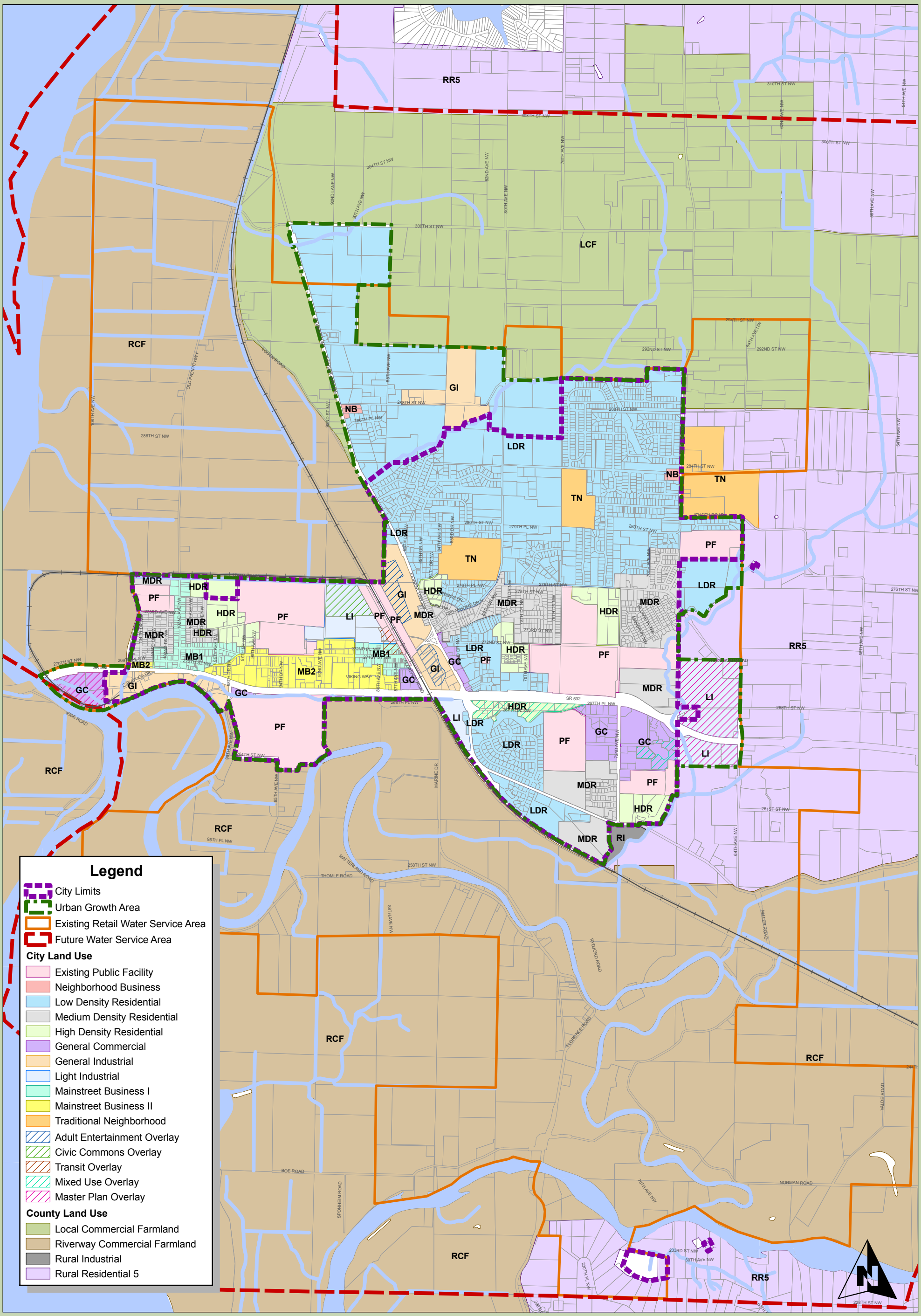

CITY OF STANWOOD
COMPREHENSIVE WATER SYSTEM PLAN

FIGURE 3-1
LAND USE

1 in = 2,000 ft

0 1,000 2,000

DRAWING IS NOT TO SCALE
IF BAR IS NOT 1" LONG

J:\data\STA\107-088\GIS\MAPS\STA-WSP-Fig3-1.mxd DATE REVISED: OCT 2, 2009 BY: MRC

Consistency

The GMA requires planning consistency from two perspectives. First, it requires consistency of plans among jurisdictions. This means that plans and policies of the City and County must be consistent (RCW 36.70A.100). Second, the GMA requires the implementation of the plan be consistent with the comprehensive plans (RCW 36.70A.120).

The 2003 Municipal Water Law also requires that water system plans are consistent with local plans and regulations. The signed Consistency Statement Checklists included in **Appendix D** from the City and County Planning Departments document the determination that this WSP is consistent with their plans and regulations.

Concurrency

Concurrency means that adequate public facilities and services be provided at the time growth occurs. For example, growth should not occur where schools, roads and other public facilities are overloaded. To achieve this objective, the GMA directs growth to areas already served or readily served by public facilities and services (RCW 36.70A.110). It also requires that when public facilities and services cannot be maintained at an acceptable level of service, the new development should be prohibited (RCW 36.70A.110).

Critical Areas

The GMA requires that critical areas be designated and protected. Critical areas include aquifer recharge areas, wetlands and steep slopes. The SEPA checklist in **Appendix E** addresses other environmental concerns.

City of Stanwood Comprehensive Plan

The Land Use Element of the City's *2007 Comprehensive Plan* is the City's vision of how growth and development should occur over a 20-year horizon. While the Land Use Element goals and policies set forth general standards for locating land uses, the Land Use Map, which has been reproduced and is shown in **Figure 3-1**, indicates geographically where certain types of uses may be appropriate. The Land Use Map is a blueprint for development of an area, whereas the zoning code is the regulatory means for implementing it.

The Land Use Element considers the general location of land uses, as well as the appropriate intensity and density of land uses given the current development trends. The utilities, transportation and capital facilities elements ensure that new development will be adequately serviced without compromising existing levels of service, similar to the principal of concurrency as defined in the GMA. The City's WSP is reviewed and taken into consideration during the development of, and subsequent revisions, to the Capital Facilities Element of the *Comprehensive Plan*.

The City encompasses an area of approximately 1,710 acres or 2.7 square miles. According to the *Comprehensive Plan*, 89 percent of the land area within the City limits was developed in 2003. Approximately 93 percent of the residential land area was developed. Therefore, the City must annex and broaden its boundaries to accommodate the growth mandated by the GMA. Vacant land within the City limits is limited and infilling is expected and encouraged. The City's UGA consists of approximately 2,187 acres or 3.4 square miles.

Snohomish County Comprehensive Plan

The County adopted the *Snohomish County Comprehensive Plan* on June 28, 1995. The plan took effect on July 10, 1995. Since this time, the plan has been amended several times to incorporate UGA changes, capital facility plan changes and land use changes. The most recent amendments were effective on December 22, 2008. The plan consists of the following five sections.

- General Policy Plan
- Future Land Use Map
- Transportation Element
- Capital Facilities Plan
- Park and Recreation Comprehensive Plan

The County's *Comprehensive Plan* guides development in rural, unincorporated Snohomish County and designates land use in the unincorporated UGA. Similar to the City's *Comprehensive Plan*, the County's plan contains the following land use goals which "form the basis of the County's land use strategy and:

- provides for a supply and distribution of land use types to accommodate the majority of county population and employment growth within urban growth area;
- …reduces development pressures and patterns of sprawl within rural areas;
- conserves agricultural, forest and mineral resource lands of long-term commercial significance; and
- preserves and protects open space, scenic and cultural resources."

North Snohomish County Coordinated Water System Plan

The *North Snohomish County Coordinated Water System Plan* (CWSP), dated October 1991, is the result of a study performed by Economic and Engineering Services, Inc. under direction of the County's Water Utility Coordinating Committee (WUCC), the County, Tulalip Tribes and the Snohomish County Public Utility District (PUD). The members of the WUCC represent the collective efforts of all public water systems with more than ten service connections that provide service within the Critical Water Supply Service Area (CWSSA). The Snohomish County Council declared North Snohomish County a CWSSA on October 19, 1988.

The purpose of the CWSP is to assist the area's water utilities in establishing an effective process for planning and developing of public water systems and restricting the proliferation of small public water systems. The CWSP accomplishes this by establishing future service area boundaries, minimum design standards, service review procedures, appeals procedures, long-term regional water supply strategies, water conservation program and goals, and the satellite system management program. As can be seen in

the following sections of this WSP, the City has established policies, design criteria and goals that meet or exceed the requirements and goals of the CWSP.

LAND USE

The City limits currently encompass an area of approximately 1,727 acres. The City's UGA encompasses an additional 461 acres outside of the current City limits. The future water service area is significantly larger than the City's UGA, with 14,361 total acres. The City's Future Land Use Map, shown in **Figure 3-1** and originally published in the City's *Comprehensive Plan*, guides development within the City. Land use outside the UGA is designated by the County, as shown in the figure.

Approximately 60 percent of the area within the current City limits is designated for residential use. Approximately 10 percent is commercial land, including industrial uses; approximately 8 percent is designated for business use; and approximately 18 percent is for public facilities. The remaining 4 percent of the land area within the City limits is non-designated right-of-way.

Within the current UGA and outside of the City limits, a much higher percentage of land use, approximately 79 percent, is residential. The remaining land area within the UGA and outside of the City limits is designated for business, commercial and industrial use.

Finally, the future water service area is comprised of three types of land uses: residential, mineral conservation and agricultural. Residential use within the future water service area, but outside of the UGA, is approximately 36 percent of the total area. Mineral conservation comprises 0.5 percent of this land area, whereas the remaining 61.5 percent is designated for agriculture. The remaining 2 percent of the land area is non-designated right-of-way and City owned property.

POPULATION

Household Trends

The City is primarily a residential community comprised largely of single family residences. In 2008, the Office of Financial Management (OFM) estimated that 1,565 housing units in the City, or 71 percent, were single family residential, and approximately 649 housing units, or 29 percent, were multi-family residential.

The housing element of the City's *Comprehensive Plan* states that the average household size in the City was 2.65 persons per household in 2000, which is similar to the average household size in all of the County. The housing element anticipates that the average household size for the City will remain consistent through 2025.

Existing and Future Population

The County has experienced rapid population growth and extensive physical developments in recent years. The population of the County increased nearly 15 percent from 2000 to 2008 based on OFM estimates. The population of the City increased approximately 39 percent during the same period, which included several annexations. **Table 3-1** illustrates the historical population growth since 1990.

Table 3-1
Population Trends within the City Limits

Year	Population
Historical	
1980	1,646
1990	1,961
1991	2,096
1992	2,198
1993	2,301
1994	2,582
1995	2,910
1996	3,025
1997	3,196
1998	3,282
1999	3,755
2000	3,923
2001	3,975
2002	4,085
2003	4,190
2004	4,315
2005	4,580
2006	4,940
2007	5,200
2008	5,445

NOTE: The historical population represents the population within the City limits.

The projected future growth within the City limits is shown in **Table 3-2** and **Figure 3-2**. The projected population data is based on current OFM estimates of the City's population and the medium growth rate projection of 3 percent presented in the land use element of the City's *Comprehensive Plan*. The projections assume that the City will annex areas within the UGA to accommodate this growth. The City's population is expected to grow from 5,445 people in 2008 to approximately 9,548 people in 2027.

Table 3-2
Population Projections within the City Limits

Year	Population
Projected	
2013	6,312
2020	7,763
2027	9,548

NOTE: The projected population is based on estimated growth rates within the current city limits and UGA.

Figure 3-2
Population Projections within the City Limits

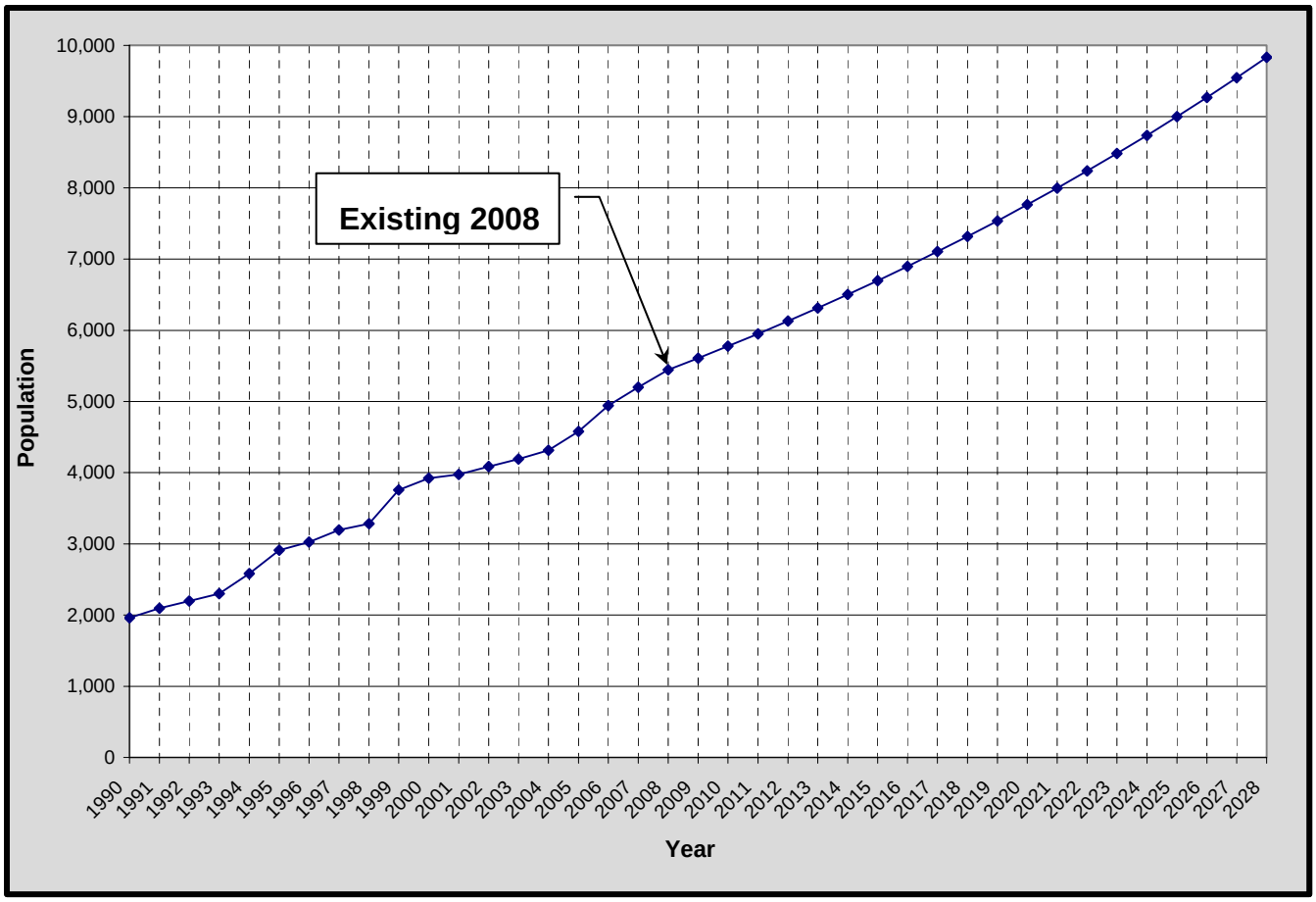

The actual number of people served by the City's water system is greater than that shown in the population table. The actual population served by the water system is calculated in **Chapter 4** using the number of residential units served and the average household size. For the purposes of estimating demands, the population projections for the City's service area are presented in **Table 3-3**. The system is expected to provide service to approximately 12,670 people by 2027.

Table 3-3
Water System Population Projections

Year	Population
Projected	
2013	8,377
2020	10,302
2027	12,670

NOTE: The projected population is based on estimated growth rates within the current city limits and UGA.

Water Demands

4

INTRODUCTION

A detailed analysis of system demands is crucial to the planning efforts of a water supplier. A demand analysis first identifies current demands to determine if the existing system can effectively provide an adequate quantity of water to its customers under the most crucial conditions, in accordance with federal and state laws. A future demand analysis identifies projected demands to determine how much water will be needed to satisfy the water system's future growth and continue to meet federal and state laws.

The magnitude of water demands is typically based on three main factors: 1) population; 2) weather; and 3) water use classification. Population and weather have the two largest impacts on water system demands. Population growth has a tendency to increase the annual demand, whereas high temperature has a tendency to increase the demand over a short period of time. Population does not solely determine demand because different populations use varying amounts of water. The use varies based on the number of users in each customer class, land use density and irrigation practices. Water conservation efforts also impact demands and can be used to accommodate a portion of system growth without increasing a system's supply capacity.

Demands on the water system determine the size of storage reservoirs, supply facilities, water mains and treatment facilities. Several different types of demands were analyzed and are addressed in this chapter, including average day demand, peak day demand, peak hour demand, fire flow demand, future demands and a demand reduction forecast based on the proposed Water Use Efficiency program.

This chapter was updated in May 2010 to include year 2008 and 2009 demand data, as requested by the Department of Health. However, other chapters of this Comprehensive Water System Plan (WSP) were not revised based on these revisions and therefore utilize year 2007 as a base year. Water savings from the City's Water Use Efficiency program resulted in the actual demand in 2008 and 2009 less than previous projections. The revised demand projections for the 20-year planning period are also less than the previous 2007 base year projections. The analyses in other chapters, therefore, are based on more conservative demands than are presented in the revised estimates included in this chapter.

Certificate of Water Availability

In accordance with the requirements of the Growth Management Act (GMA), the City of Stanwood (City) must identify that water is available prior to issuing a building permit. A Certificate of Water Availability is issued if there is sufficient water supply to meet the domestic water service and fire flow requirements of the proposed building. The requirement for providing evidence of an adequate water supply was codified in 1990 under RCW 19.27.097 in the Building Code Section. To assist governments with implementing these requirements, the Department of Health (DOH) has developed a handbook titled *Guidelines for Determining Water Availability for New Buildings*.

CURRENT POPULATION AND SERVICE CONNECTIONS

Residential Population Served

The population within the City limits was 5,590 in 2009 based on estimates from the Office of Financial Management. Since the City provides water service to many customers outside of the City limits, the actual population served by the City's water system is larger. The 2009 residential population served by the City is estimated to be approximately 7,115. The computation of this number is discussed later in this chapter and a more detailed discussion of the City's population and household trends is in **Chapter 3**.

In 2009, the City provided water service to an average of 3,051 customer accounts, of which approximately 2,010 (66 percent) of these accounts were single family residential customers, 675 accounts (22 percent) were multi-family residential customers and 366 accounts (12 percent) were all other customer types.

Water Use Classifications

The City has divided all water customers into nine different classes for billing purposes. For planning purposes, the water customers have been combined into four different groups: 1) single family residential; 2) multi-family residential; 3) Twin City Foods; and 4) commercial/other. Twin City Foods, the City's largest water consumer with two large metered connections, is its own group because it has a separate contract with the City that is different than the other customer groups. The commercial/other group includes the following billing classes: large industries, business/office retail, restaurants/bars, schools/churches, medical facilities, irrigation, laundry, motels, beauty shops and nursing homes. The demand analysis that follows will report on the water use patterns of these four user groups.

EXISTING WATER DEMANDS

Water Consumption

Water consumption is the amount of water used by all customers of the system, as measured by the customer's meters. **Table 4-1** shows the historical average number of connections, average annual consumption and average daily consumption per connection of each customer class for the City from 1997 through 2009. Consumption data prior to 1997 and from 2000 through 2003 was not available for inclusion in this WSP.

Table 4-1
Average Annual Metered Consumption and Service Connections

Year	Customer Class				Totals
	Single Family	Multi-Family[1]	Twin City Foods	Commercial/Other	
Average Number of Connections[2]					
1997	1,258	---	2	214	---
1998	1,348	---	2	219	---
1999	1,357	---	2	255	---
2004	1,672	---	2	279	---
2005	1,706	---	2	289	---
2006	1,770	656	2	297	2,725
2007	1,898	670	2	301	2,871
2008	1,978	680	2	358	3,018
2009	2,010	675	2	364	3,051
Average Annual Consumption (1,000 gals)[2]					
1997	128,298	28,862	37,552	91,416	286,128
1998	118,744	14,241	39,198	99,149	271,332
1999	114,970	22,004	39,647	101,427	278,048
2004	117,885	22,608	55,432	118,704	314,629
2005	128,327	13,960	58,900	90,707	291,894
2006	125,397	25,911	54,567	108,009	313,885
2007	135,123	23,538	57,265	92,959	308,884
2008	125,604	24,618	53,575	106,156	309,952
2009	134,926	26,164	52,811	110,648	324,549
Average Daily Consumption Per Connection (gal/day/conn)[2]					
1997	279	---	51,441	1,170	
1998	241	---	53,696	1,240	
1999	232	---	54,311	1,090	
2004	193	---	75,934	1,166	
2005	206	---	80,684	860	
2006	194	108	74,749	996	
2007	195	96	78,445	846	
2008	174	99	73,390	812	
2009	184	106	72,344	833	
Average	211	102	68,333	1,002	

1 = Multi-family data represents average number of units served. Number of units served is not available for 1997 through 2005.
2 = Data from 2000 through 2003 is not available.

The number of multi-family connections is less than the number of units served since one connection typically serves several units. **Table 4-2** shows the historical average number of multi-family connections, occupied multi-family units and available multi-family units within the City's water service area from 2006 through 2009. Multi-family connection and unit data is not available prior to 2006.

Table 4-2
Multi-Family Connections

Year	Average Number of Connections	Average Number of Occupied Units	Total Available Units
2006	69	656	690
2007	71	670	690
2008	69	680	690
2009	69	675	690

As shown in **Chart 4-1**, the single family residential class represents approximately 66 percent of all connections, but only 42 percent of total system consumption, as shown in **Chart 4-2**. This is due to the lower consumption per connection of single family residential customers as compared to some other customers. As shown in **Table 4-1**, the single family residential customers use an average of approximately 211 gallons per day per connection, compared to the multi-family customers that use an average of approximately 102 gallons per day per unit, and the commercial and other customers that use an average of approximately 1,002 gallons per day per connection. Twin City Foods only has two connections, but the company uses an average of approximately 68,333 gallons per day per connection. The lower consumption of multi-family customers is expected since the average household size of multi-family units is less than that the average household size of single family units and multi-family units consume considerably less water for lawn and garden maintenance. Additionally, the higher consumption of commercial customers is expected since these customers include the system's highest individual water users.

Chart 4-1
2009 Water Connections by Customer Class

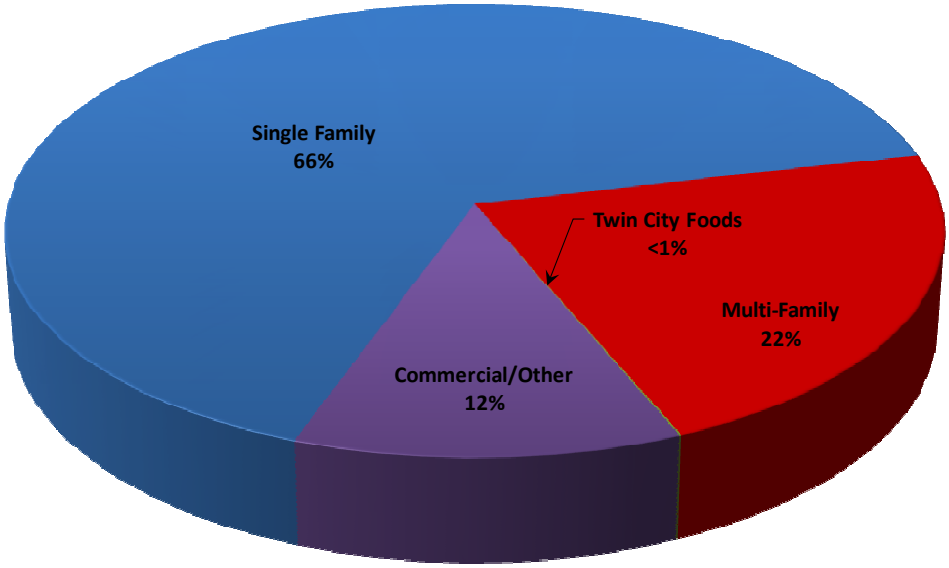

Chart 4-2
2009 Water Consumption by Customer Class

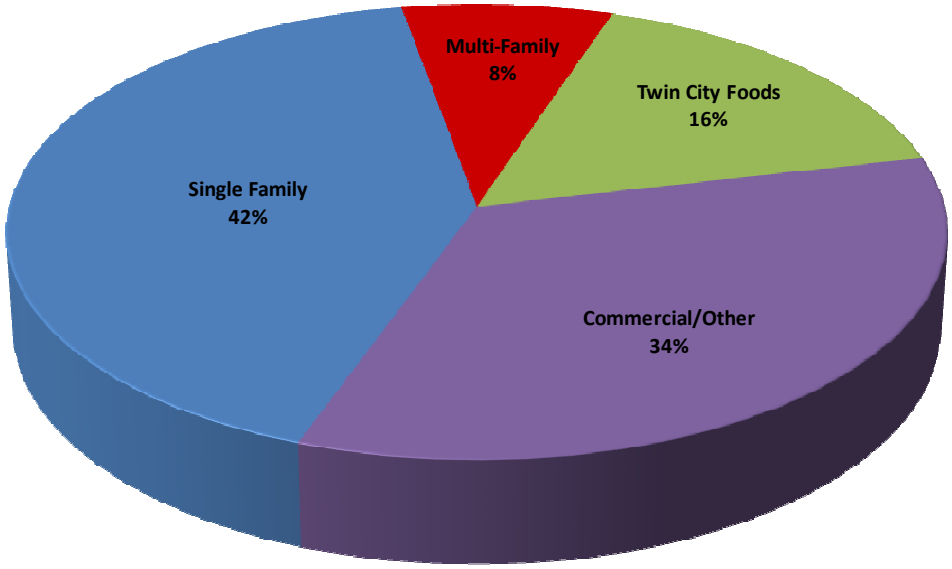

Table 4-3 shows the largest water users of the system in 2009 and their total amount of metered consumption for the year. The total water consumption of these 10 water accounts represented approximately 36 percent of the system's total consumption in 2009. The list of accounts in the table consists of Twin City Foods and businesses from the commercial/other customer class, including agricultural and industrial companies, fitness facilities and a nursing home.

Table 4-3
2009 Largest Water Users

Name	Address	Yearly Consumption (gals)
Twin City Foods	10120 269th Pl NW	52,814,483
Schenk Packing	8204 288th NW	34,159,121
Josephine Sunset Home	9901 272nd Pl NW	9,253,052
North Star Cold Storage	27110 Pioneer Hwy	5,952,250
Haggen	26603 72nd Ave NW	4,472,528
Viking Laundry	8820 Viking Way #2	2,286,271
Merrill Gardens	7212 265th St NW	2,076,353
QFC	27008 92nd Ave NW	2,075,844
Team Fitness Health Club (Uphill)	7213 267th Street NW	1,571,657
Team Fitness Health Club	7214 267th Street NW	1,569,443
Largest Water Users Total		116,231,003
Water System Total		324,548,620
Percent of Total		36%

Water Supply

Water supply, or production, is the total amount of water supplied to the system, as measured by the meters at the Hatt Slough Springs and each well facility. Water supply is different than water consumption in that water supply is the recorded amount of water put into the system and water consumption is the recorded amount of water taken out of the system. The measured amount of water supply of any system is typically larger than the measured amount of water consumption, due to non-metered water use and water loss (i.e. distribution system leakage), which will be described more in the **Distribution System Leakage** section. **Table 4-4** summarizes the total amount of water supplied to the system from 1992 through 2009 and the calculated average day demand for each year.

Table 4-4
Historical Water Supply and System Demand

Year	Annual Supply (gallons)	Average Daily Demand (gpm)
1992	430,059,600	818
1993	347,541,950	661
1994	342,162,215	651
1995	353,665,000	673
1996	347,018,191	660
1997	360,709,473	686
1998	338,001,593	643
1999	337,599,296	642
2000 [1]	---	---
2001	299,445,937	570
2002	345,569,337	657
2003	354,804,548	675
2004	363,152,529	691
2005	354,672,584	675
2006	373,942,267	711
2007	348,153,550	662
2008	344,998,534	656
2009	355,421,020	676

1 = Complete data for 2000 not available.

In general, the amount of water supplied to the City, or system-wide water demand, has remained relatively steady since 1993, while population has doubled. This is most likely the result of water use efficiency practices, including new buildings with low flow plumbing fixtures and the repair of water system leaks. Twin City Foods has likely contributed to the overall decrease in demand since 1997, when the company rebuilt the entire plant to replace the older facility that was lost in a fire in 1996. The rebuilt plant uses water much more efficiently than the pre-fire plant.

Table 4-5 presents the computation of the existing system per capita demand based on 2009 data. As shown in the upper portion of the table, the residential population served by the City's water system is approximately 7,115, and is based on the recorded number of residential units served and the average residential household size. This population number and the City's total water supply in 2009 were used to arrive at the existing per capita demand of 137 gallons per day (gpd). This is relatively comparable to other systems in the Puget Sound area. However, the City is unique in that the proportion of overall water demand is not predominantly from residential users as in most

systems. In addition, the City has a significant amount of large non-residential water users, such as Twin City Foods and others shown in **Table 4-3**, for a City of its size.

Table 4-5
Existing Per Capita Demand

2009 Residential Population Served Computation	
2009 Single Family Units	2,010
2009 Multi-Family Units	675
Total 2009 Residential Units	2,685
Average Household Size (People per Unit)	2.65
Calculated 2009 Residential Population Served	7,115
2009 Total Annual Supply	
2009 Total Annual Supply (gal)	355,421,020
Existing Per Capita Demand (gal/day/capita)	**137**

Since it is likely that the future growth of the City and future demand for water supply will not be similar to the existing demand allocation (i.e., approximately 50 percent non-residential demand), the use of the existing system per capita demand of 137 gpd would not be accurate for projecting future demands. Therefore, an additional computation of per capita demand was performed to provide a more accurate estimate for use in forecasting future water demand. The computation of future per capita demand shown in **Table 4-6** is based on a reduced proportion of non-residential demand that is likely to be more representative of the future type of demand to occur in the City's system. The estimated per capita demand of 99 gpd is used later in this chapter to forecast water demands in future years based on future population estimates.

Table 4-6
Future Per Capita Demand Projection

Residential Population Served Computation	
2009 Single Family Units	2,010
2009 Multi-Family Units	675
Total 2009 Residential Units	2,685
Average Household Size (People per Unit)	2.65
Calculated 2009 Residential Population Served	7,115
Adjusted Total Annual Supply	
2009 Total Annual Supply (gal)	355,421,020
Less Annual Supply of Large Users Not Representative of Future New Users (gal)	97,395,184
2009 Net Annual Supply Adjusted for Future Anticipated Users (gal)	258,025,836
Estimated Per Capita Demand for Future Demand Projections (gal/day/capita)	**99**

Table 4-7 shows the average demand of each of the City's seven existing pressure zones, based on 2009 water demand data. The City's two largest pressure zones, the 297 and 125 Zones, account for approximately 88 percent of the total system demand.

Table 4-7
2009 Demands by Pressure Zone

Pressure Zone	2009 Annual Supply (gallons)	Average Daily Demand (gpm)	Percent of Total Demand (%)
365	20,409,540	39	5.7%
297	169,825,044	323	47.8%
265	7,073,752	13	2.0%
255	7,932,136	15	2.2%
252	1,325,078	3	0.4%
242	6,708,730	13	1.9%
125	142,146,740	270	40.0%
Total	355,421,020	676	100%

Like most other water systems, the City's water use varies seasonally. **Chart 4-3** shows the historical amount of water supplied to the City's system for each month from 2003 to 2009.

Chart 4-3
Historical Monthly Water Supply

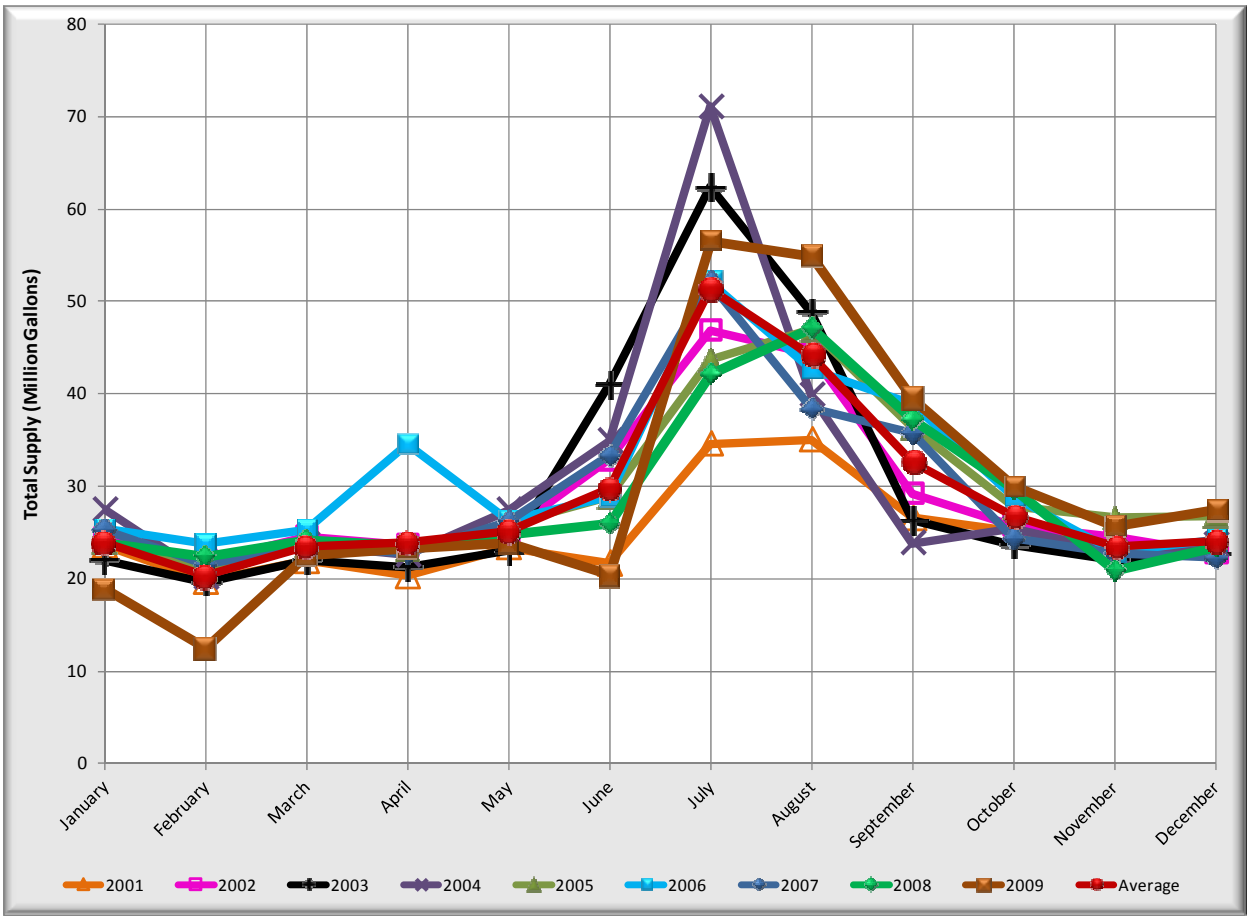

As shown in **Chart 4-3**, water supply increases significantly during summer months, primarily due to irrigation. The City's highest water use typically occurs in July and August. On average, the amount of water supplied during these two months is approximately 27 percent of the total supply for the entire year. Water production from Bryant Well No. 1 is increased to meet the additional demand during these peak periods, as shown in **Chart 4-4**. Since the Cedarhome Well was completed in 2009, water production from the well is also increased to supplement supply from Bryant Well No. 1 and the Hatt Slough Springs to meet peak summertime demands.

Chart 4-4
2009 Monthly Water Supply by Source

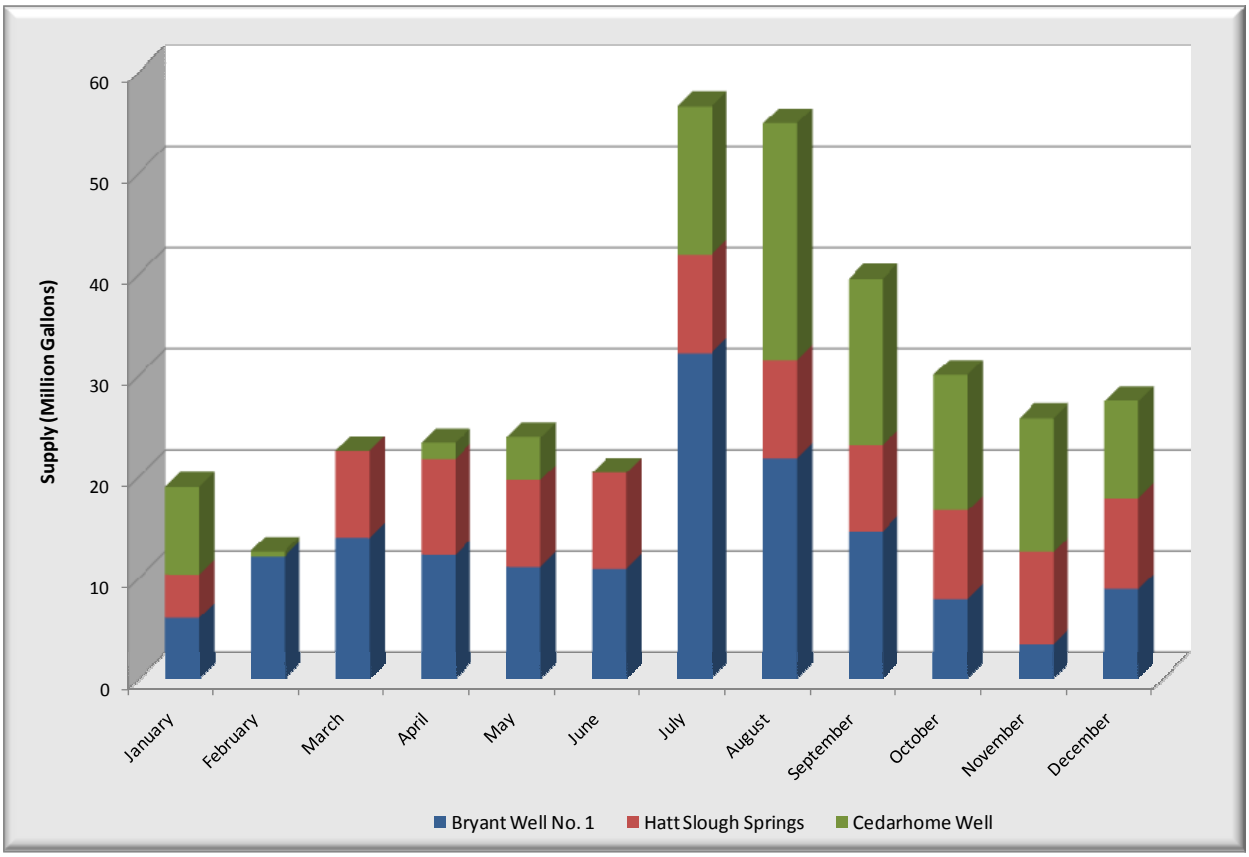

Distribution System Leakage

The difference between the amount of water supply and water consumption is the amount of distribution system leakage (DSL). The amount of DSL in a water system is calculated as the difference between the amount of water supply and the amount of authorized water consumption. There are many sources of DSL in a typical water system, including water system leaks, inaccurate supply metering, inaccurate customer metering, illegal water system connections or water use, fire hydrant usage, water main flushing, well backwash, and malfunctioning telemetry and control equipment resulting in reservoir overflows. Several of these types of usages, such as water main flushing, fire hydrant usage and well backwash, may be considered authorized uses if they are tracked and estimated. Although real losses from the distribution system, such as reservoir overflows and leaking water main, should be tracked for accounting purposes, these losses must be considered leakage. The Water Use Efficiency (WUE) Rule, which became effective in 2007, establishes a DSL standard of 10 percent or less based on a rolling three-year average.

The amount of DSL in the City's system has decreased significantly from 1997 to 2009, as shown in **Table 4-8**. This is likely due to the system-wide replacement of old and likely inaccurate customer meters, that began in the mid-1980s; the repair of water system leaks that were discovered in 1993 when half of the system was surveyed for leaks; and the reduced usage of non-metered water for

construction projects. In 1999, the City changed its policy from charging an annual flat fee for construction water use to a per load charge to discourage unnecessary water use.

The City intends to continue to reduce the amount of DSL in the system to meet the DSL standard through its customer meter replacement program. The City will continue to record the amount of water used for flushing the distribution system and construction purposes, and conducting leak detection surveys of the system. The City will also implement the Water Use Efficiency Program contained in **Appendix F**.

Table 4-8
Distribution System Leakage

	Year[1]								
	1997	1998	1999	2004	2005	2006	2007	2008	2009
Authorized Consumption (AC)									
Metered Customer Use (1,000 gal)	286,128	271,332	278,048	314,629	291,894	313,885	308,884	309,952	324,549
Hydrant Meter Use (1,000 gal)				21	157	768	316	148	148
Fire Department Usage (1,000 gal)							1,700	1,745	13
Water Main Flushing (1,000 gal)								300	3
Total Authorized Consumption (1,000 gal)	286,128	271,332	278,048	314,649	292,050	314,653	310,900	311,845	324,709
Total Production (TP)									
Total Production/Supply (1,000 gal)	360,709	338,002	337,599	363,153	354,673	373,942	348,154	344,999	355,421
Distribution System Leakage (TP - AC)									
Total Distribution System Leakage (1,000 gal)	74,581	66,669	59,552	48,503	62,622	59,290	37,253	33,153	30,712
Total Distribution System Leakage (%)	20.7%	19.7%	17.6%	13.4%	17.7%	15.9%	10.7%	9.6%	8.6%
Rolling 3-Year Average DSL (%)	---	---	19%	---	---	16%	15%	12%	10%

1 = Data from 2000 through 2003 is not available.

Equivalent Residential Units

The demand of each customer class can be expressed in terms of equivalent residential units (ERUs) for demand forecasting and planning purposes. One ERU is equivalent to the amount of water used by a single family residence. The number of ERUs represented by the demand of the other customer classes is determined from the total demand of the customer class and the unit demand per ERU from the single family residential demand data.

Table 4-9 presents the computed number of ERUs for each customer class from 1997 through 2009. The demands shown are based on supply data that was computed from the consumption of each customer class and the average amount of DSL from each year. Data is excluded for the years 2000 through 2003 due to missing consumption data for all of the customer classes. The average demand per ERU from 2004 through 2007 was 231 gpd. This is slightly less than the average single family demand in the Puget Sound area, which is typically between 250 and 300 gpd.

Table 4-9
Equivalent Residential Units

Year	Average Number of Connections[1]	Average Annual Demand (gallons)	Demand per ERU (gal/day/ERU)	Total ERUs
Single Family Residential (ERU Basis)[2]				
1997	1,258	161,739,438	352	1,258
1998	1,348	147,921,061	301	1,348
1999	1,357	139,594,328	282	1,357
2004	1,672	136,065,345	223	1,672
2005	1,706	155,926,677	250	1,706
2006	1,770	149,390,151	231	1,770
2007	1,898	152,301,365	220	1,898
2008	1,978	139,806,127	194	1,978
2009	2,010	147,760,255	201	2,010
Multi-Family Residential[2]				
1997	---	36,384,994	352	283
1998	---	17,740,044	301	162
1999	---	26,716,556	282	260
2004	---	26,094,510	223	321
2005	---	16,962,340	250	186
2006	656	30,869,218	231	366
2007	670	26,530,622	220	331
2008	680	27,401,456	194	388
2009	675	28,652,656	201	390
Twin City Foods[2]				
1997	2	47,340,403	352	368
1998	2	48,829,313	301	445
1999	2	48,138,218	282	468
2004	2	63,981,124	223	786
2005	2	71,567,445	250	783
2006	2	65,007,617	231	770
2007	2	64,544,908	220	804
2008	2	59,632,162	194	844
2009	2	57,834,394	201	787

1 = Multi-family data represents average number of units served.
2 = Data from 2000 through 2003 is unavailable.

Table 4-9
Equivalent Residential Units - Continued

Year	Average Number of Connections	Average Annual Demand (gallons)	Demand per ERU (gal/day/ERU)	Total ERUs
Commercial/Other[2]				
1997	214	115,244,637	352	896
1998	219	123,511,175	301	1,126
1999	255	123,150,194	282	1,197
2004	279	137,011,550	223	1,684
2005	289	110,216,122	250	1,206
2006	297	128,675,281	231	1,525
2007	301	104,776,654	220	1,306
2008	358	118,158,788	194	1,672
2009	364	121,173,716	201	1,648
System-Wide Totals[2]				
1997	---	360,709,473	352	2,806
1998	---	338,001,593	301	3,080
1999	---	337,599,296	282	3,282
2004	---	363,152,529	223	4,462
2005	---	354,672,584	250	3,880
2006	2,725	373,942,267	231	4,431
2007	2,871	348,153,550	220	4,339
2008	3,018	344,998,534	194	4,881
2009	3,051	355,421,020	201	4,835

2 = Data from 2000 through 2003 is unavailable.

The average demand per ERU from 2004 through 2007 of 231 gpd will be used later in this chapter to forecast ERUs in future years based on estimated future demands. This demand per ERU value will also be used to determine the capacity (in terms of ERUs) of the existing system in **Chapter 7**.

Average Day Demand

Average day demand (ADD) is the total amount of water delivered to the system in a year divided by the number of days in the year. The ADD is determined from historical water use patterns of the system and can be used to project future demand within the system. ADD data are typically used to determine standby storage requirements for water systems. Standby storage is the volume of a reservoir used to provide water supply under emergency conditions when supply facilities are out of service. Water production records from the City's wells and spring sources were reviewed to determine the system's ADD. The system's average day demand from 1992 through 2009 is shown in **Table 4-4**.

Peak Day Demand

Peak day demand (PDD) is the maximum amount of water used throughout the system during a 24-hour time period of a given year. PDD typically occurs on a hot summer day when lawn watering is occurring throughout much of the system. In accordance with WAC 246-290-230, the distribution system shall provide fire flow at a minimum pressure of 20 psi during maximum day demand (i.e., peak day demand) conditions. Supply facilities (wells, springs, pump stations, interties) are typically designed to supply water at a rate that is equal to or greater than the system's PDD.

Daily water production records and chart recordings of reservoir levels were reviewed to determine the system's PDD. The City's PDD occurred on July 23, 2006 when temperatures reached 91°F and were as high as 93°F the days before and after. As shown in **Table 4-10**, the average demand of the system on July 23, 2006, or PDD, was 1,783 gallons per minute (gpm).

Peak Hour Demand

Peak hour demand (PHD) is the maximum amount of water used throughout the system, excluding fire flow, during a one-hour time period of a given year. In accordance with WAC 246-290-230, new public water systems or additions to existing systems shall be designed to provide domestic water at a minimum pressure of 30 psi during PHD conditions. Equalizing storage requirements are typically based on PHD data.

The PHD, like the PDD, is typically determined from the combined flow of water into the system from all supply sources and reservoirs. Hourly water production and reservoir level records were reviewed to evaluate the PHD. As shown in **Table 4-10,** the City's PHD, which occurred on July 23, 2006 from 8:00 to 9:00 pm, was 2,291 gpm. **Table 4-10** also shows the peaking factors of the water system based on the ADD, PDD and PHD data presented above. The peak day demand/average day demand ratio is at the high end of the typical range of 1.2 to 2.5 for most systems. The estimated peak hour demand/peak day demand ratio is at the low end of the typical range of 1.3 to 2.0 for most systems. These peaking factors will be used later in this chapter in conjunction with projected ADDs to project future peak day and peak hour demands of the system.

Table 4-10
Peak Day Demands and Peaking Factors

Peak Demand Data

Demand Type	Date	Demand (gpm)
Average Day Demand (ADD)	2006	711
Peak Day Demand (PDD)	7/23/2006	1,783
Peak Hour Demand (PHD)	7/23/2006 8:00 PM - 9:00 PM	2,291

Peaking Factors

Peak Day Demand/Average Day Demand (PDD/ADD)	2.51
Peak Hour Demand/Peak Day Demand (PHD/PDD)	1.29
Peak Hour Demand/Average Day Demand (PHD/ADD)	3.22

Fire Flow Demand

Fire flow demand is the amount of water required during fire fighting as defined by applicable codes. Fire flow requirements are established for individual buildings and expressed in terms of flow rate (gpm) and flow duration (hours). Fighting fires imposes the greatest demand on the water system because a high rate of water must be supplied over a short period of time, requiring each component of the system to be properly sized and configured to operate at its optimal condition. Adequate storage and supply is useless if the transmission or distribution system cannot deliver water at the required rate and pressure necessary to extinguish a fire.

General planning level fire flow requirements were established for the different land use categories to provide a target level of service for planning and sizing future water facilities in areas that are not fully developed. The general planning level fire flow requirement for each land use category is shown in **Table 4-11**. The water system analyses presented in **Chapter 7** are based on an evaluation of the water system for providing sufficient fire flow in accordance with these general planning level fire flow requirements. The fire flow requirements shown in the table do not necessarily equate to actual existing or future fire flow requirements for all buildings, since this is typically based on building size, construction type and fire suppression systems provided. Improvements to increase the available fire flow to meet actual fire flow requirements greater than those shown in the table shall be the responsibility of the developer.

Table 4-11
General Planning Level Fire Flow Requirements

Land Use Category	Fire Flow Requirement (gpm)	Flow Duration (hours)
Low Density Residential	1,000	2
Medium Density Residential	1,750	2
High Density Residential	2,500	2
Commecial/Business Park	3,000	3
Light Industrial	3,500	3
Schools	3,500	3

FUTURE WATER DEMANDS

Basis for Projecting Demands

Future demands were calculated from the results of the future per capita demand computations shown in **Table 4-6** and the projected population data from **Chapter 3**. Future demand projections were computed with and without water savings expected from implementing WUE measures contained in the City's WUE Program in **Appendix F**. The calculated future per capita demand of 99 gpd was used for all demand projections without savings from WUE measures. The per capita demand was reduced to reflect the water use efficiency goals and used as the basis for future water demand projections with implementation of the WUE Program. The City's WUE Program presents a goal to reduce the 4-year rolling average demand per ERU by 5 percent by the year 2019 and by 8 percent by the year 2029.

Demand Forecasts and Conservation

Table 4-12 presents the projected water demand forecast for the City's water system. The actual demand data from 2006 through 2009 is also shown in the table for comparison purposes. The future average day demands were projected based on population estimates for the given years and the estimated demand per capita values. The future peak day and peak hour demands shown were computed from the projected average day demands and the existing system peaking factors shown in **Table 4-10**. The future demand projections are also shown with and without estimated reductions in water use from achieving WUE goals.

Table 4-12
Future Water Demand Projections

Description	Actual[1]				Projected									
	2006	2007	2008	2009	2010	2011	2012	2013	2014	2015	2016	2027	2028	2029
Population Data														
Water Service Area Population	6,429	6,805	7,044	7,115	7,353	7,573	7,801	8,035	8,276	8,524	8,780	12,153	12,518	12,893
Increase from Base Year 2009					238	458	685	919	1,160	1,409	1,664	5,038	5,402	5,778
Average Day Demand (gpm)														
Demand without WUE	711	662	656	676	693	716	732	748	765	782	799	1,031	1,056	1,082
Demand with WUE					663	682	694	705	717	729	742	919	938	958
Peak Day Demand (gpm)														
Demand without WUE	1,786	1,663	1,648	1,697	1,739	1,798	1,837	1,878	1,919	1,962	2,006	2,588	2,651	2,716
Demand with WUE					1,665	1,712	1,741	1,770	1,800	1,831	1,862	2,305	2,354	2,404
Peak Hour Demand (gpm)														
Demand without WUE	2,291	2,133	2,114	2,177	2,231	2,307	2,357	2,409	2,462	2,517	2,574	3,321	3,401	3,484
Demand with WUE					2,135	2,197	2,233	2,271	2,309	2,349	2,389	2,958	3,020	3,083

1 = 2007, 2008 and 2009 Peak Day Demand and Peak Hour Demand values are based on actual Average Day Demand amounts for the given year and 2006 peaking factors, and do not necessarily represent actual peak demands for these years.

The analysis and evaluation of the existing water system with proposed improvements, as presented in **Chapters 7** and **9**, is based on the 2027 projected demand data without WUE reductions. This ensures that the future system will be sized properly to meet all requirements, whether or not additional water use reductions are achieved. However, the City will continue to pursue reductions in water use by implementing the WUE Program contained in **Appendix F** of this WSP.

Table 4-13 presents the existing and projected ERUs of the system. The ERU forecasts are based on the projected water demands from **Table 4-12** and the 4-year rolling average demand per ERU that was computed from the actual 2006 through 2009 data. The historical and projected water demand and ERU data from **Tables 4-12** and **4-13** are also shown graphically in **Chart 4-5**.

Table 4-13
Future ERU Projections

Description	Actual				Projected									
	2006	2007	2008	2009	2010	2011	2012	2013	2014	2015	2016	2027	2028	2029
Demand Data (gpm)														
Avg Day Demand without WUE	711	662	656	676	693	716	732	748	765	782	799	1,031	1,056	1,082
ERU Basis Data (gal/day/ERU)														
Demand per ERU without WUE	231	220	194	201	220	220	220	220	220	220	220	220	220	220
Demand per ERU with WUE					210	209	208	207	206	205	204	196	195	195
Equivalent Residential Units (ERUs)														
Total System ERUs	4,431	4,339	4,881	4,835	4,537	4,691	4,793	4,899	5,007	5,119	5,234	6,753	6,917	7,086

Chart 4-5
Future Water Demand and ERU Projections

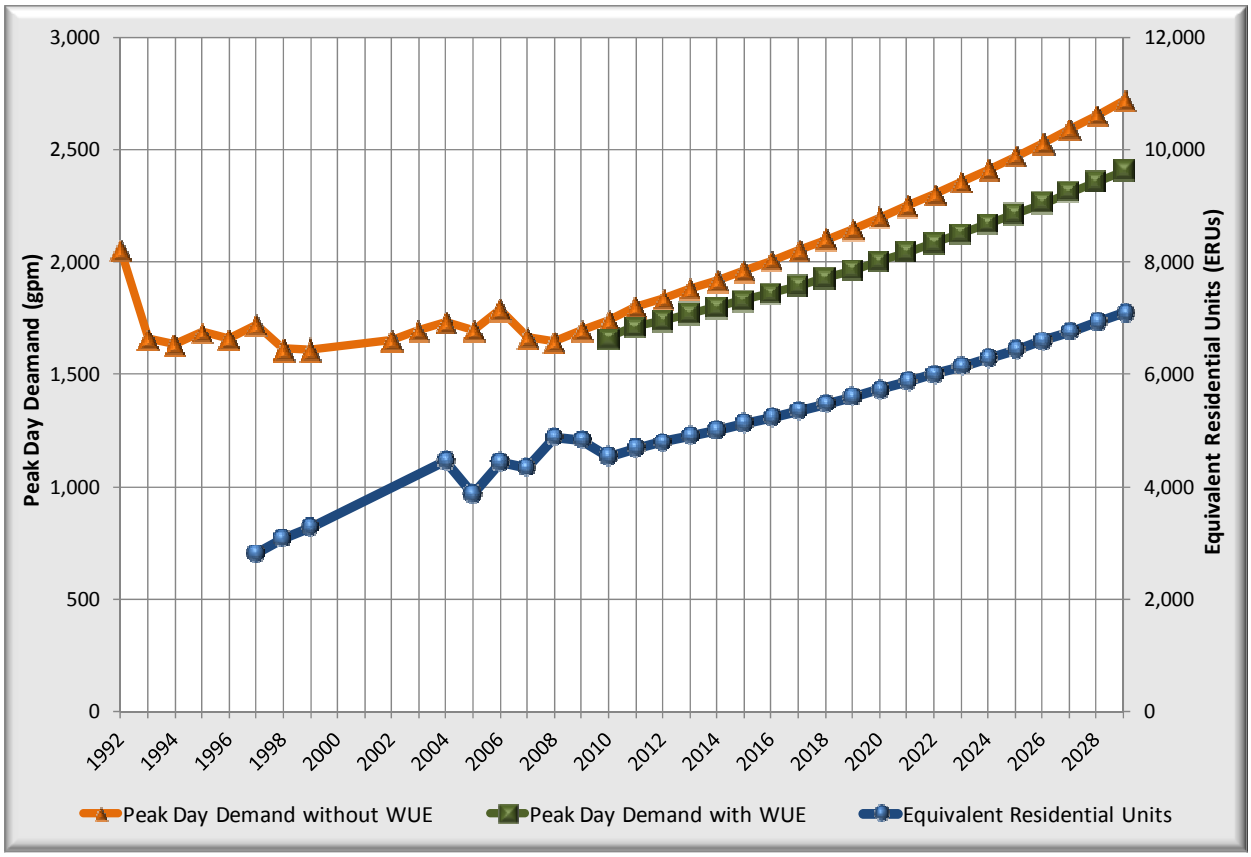

Policies and Design Criteria

5

INTRODUCTION

The City of Stanwood (City) operates and plans water service for City residents according to the design criteria, laws and policies that originate from the following seven sources, listed in descending order from those with the broadest to narrowest authority.

Table 5-1
Regulatory Agencies

Agency	Design Criteria/Laws/Policies
U.S. Department of Health & Human Services	Federal Regulations
U.S. Environmental Protection Agency	Federal Regulations
Washington State Department of Health	State Regulations
Washington State Department of Ecology	State Regulations
Snohomish County Council	County Regulations
Stanwood City Council	Administrative Policies
American Water Works Association	Design Criteria

These laws, design criteria and policies guide the City's operation and maintenance of the water system on a daily basis, and its planning for growth and improvements. Their overall objective is to ensure that the City provides high quality water service at a minimum cost to its customers. They also set the standards the City must meet to ensure that its water supply is adequate to meet existing and future water demands. The system's ability to meet these demands is detailed in **Chapter 7,** and the recommended improvements are identified in **Chapter 9**.

The highest three governmental entities establishing policies and laws – the U.S. Government, Washington State and Snohomish County Council – establish requirements in statutes, regulations or ordinances. The Stanwood City Council and Mayor adopt policies that cannot be less stringent or in conflict with those established by governments above them. The City's policies take the form of ordinances, memoranda and operation procedures, many of which are summarized in this chapter.

The policies associated with the following categories are presented in this chapter:

- Supply;
- Customer Service;
- Facilities;
- Finance; and
- Organization.

SUPPLY POLICIES

Quality Protection

- The City will pursue steps to meet or exceed all water quality laws and standards.
- The City will take all reasonable measures to protect its system and customers.

Cross-Connection Control

- The City has a responsibility to protect the public water system from contamination due to cross-connections. Cross-connections that can be eliminated will be eliminated.
- The City has a cross-connection control program for eliminating cross-connections. A copy of the City of Stanwood Cross-Connection Control Plan is contained in **Appendix G**.
- The City has staff that is certified for backflow prevention and testing.
- The City will comply with the backflow prevention assembly installation and testing requirements as indicated in WAC 246-290-490, and as published in the *Cross Connection Control Manual Accepted Procedure and Practice*, Pacific Northwest Section – American Water Works Association (AWWA).

Quantity

- The City will plan for saturation use of its supply sources so that future water resource limitations can be handled effectively.
- The City will ensure that the capacity of the system, including wells, pump stations and transmission mains, is sufficient to meet the peak day demand of the system.

Fire Flow

- The City will plan to provide the following minimum fire flows.

Low Density Residential:	1,000 gpm for 2 hours duration
Medium Density Residential:	1,750 gpm for 2 hours duration
High Density Residential:	2,500 gpm for 2 hours duration
Commercial/Business Park:	3,000 gpm for 3 hours duration
Light Industrial:	3,500 gpm for 3 hours duration
Schools:	3,500 gpm for 3 hours duration

Water Use Efficiency

- The City will promote the efficient and responsible use of water and will conserve water during a water shortage.

Regional Participation

- The City will participate in regional supply management and planning activities.
- The City will supply all customers within the City's water service area, unless a special agreement with an adjacent purveyor exists due to topography or other limiting factors.

CUSTOMER SERVICE POLICIES

Water Service and Connection

- The City will strive to provide potable water service to all people within the City limits and designated water service area, provided all policies related to service can be met.
- All proposed developments within the City limits and designated water service area shall connect directly to the City's water system, unless deemed unfeasible by the City at the time of the request.
- Water system extensions required to provide water service to proposed developments shall be approved by the Department of Public Works and must conform to the City's adopted design criteria and construction standards and specifications, as shown in the City's Water System Standards continued in **Appendix H**. All costs of the extension shall be borne by the developer.
- Water service cannot be extended outside of the water service area.
- For water service applications within the City limits, the City will review the availability for water service at the time of land use permit, site civil review and building permit. During the land use permitting process, the City will determine if water is available for the site. During the site civil review, the City will address the sizing and looping of the water main. The formal water service application begins at the time of building permitting when fire flow and service sizing is evaluated. The complete process takes several months to be completed.
- For water service applications outside of the City limits, the applicant must first obtain a water utility service agreement from the City. The City will review the agreement and determine the availability of water. Water availability requests can be processed in approximately two weeks.
- Water system capacity will be evaluated at the time of water service application. The City will use the capacity analysis contained in **Chapter 7** of this Comprehensive Water System Plan (WSP) to evaluate source of supply, storage and water rights capacity available to the applicant.

- Water system capacity, pressure and fire flow will be considered when providing water availability to applicants.

- Water availability shall expire at the time that the associated permit expires (i.e. land use, site civil or building permit).

- Time extensions in regards to water availability shall be granted in accordance with the associated permit requirements. When extensions are denied, the disputes are handled through the rules guiding the associated permit process. Disputes can be brought to the City Council for discussion.

- Individual wells may be installed on existing platted lots within the City's service area if the City determines it is unfeasible to provide direct connection to the City's water system at the time of the request. Owners of individual wells will be required to connect to the City's water system at the time City water becomes available.

Annexations

- Areas annexed without existing municipal supply will be served by the City.

- Areas annexed with existing municipal supply must meet City water standards.

- The City will follow state guidelines in the assumption of facilities in annexation areas.

Temporary Services

- No temporary service is allowed, unless there are plans for permanent water service that meets all City standards.

Emergency Service

- Compliance with standards may be temporarily deferred for emergency water service.

- Policy criteria may be waived for emergency service.

Planning Boundaries

- For planning purposes, the City will use water service boundaries established by agreement as a result of the *North Snohomish County Coordinated Water System Plan*.

- The City will follow State of Washington guidelines in assuming portions of adjacent water systems as a result of annexation.

Satellite System Management

- The City will consider providing satellite system management or ownership services within and adjacent to the City's existing service area.

FACILITY POLICIES

This section describes the planning criteria and policies used to establish an acceptable hydraulic behavior level and a standard of quality for the water system. Additional criteria are contained in the City's Water System Standards, a copy of which is included in **Appendix H**.

Minimum Standards

- All proposed developments within the City's existing and future service areas shall conform to the City's adopted design criteria, construction standards and specifications.

Pressure

- The City will endeavor to maintain a minimum pressure of 40 pounds per square inch (psi) at customer meters during normal demand conditions, excluding a fire or emergency.

- The City will endeavor to maintain a maximum pressure of 120 psi in the water mains during normal demand conditions, excluding pressure surges. Individual residences are responsible for reducing pressures over 80 psi.

- The City will endeavor to maintain a minimum pressure of 30 psi at customer meters during all demand conditions, excluding a fire or emergency.

- During fire conditions, the minimum pressure at customer meters and throughout the remainder of the system is 20 psi.

- During a failure of any part of the system, the maximum pressure will not exceed 150 psi.

Velocities

- During normal demand conditions, the velocity of water in a water main should be less than 5 feet per second (fps).

- During emergency conditions such as a fire, and for design purposes, the velocity of water in a water main may exceed 5 fps, but may not exceed 8 fps.

Storage

- Storage within the distribution system must be of sufficient capacity to supplement supply when system demands are greater than the supply capacity (equalizing storage), and still maintain sufficient storage for proper pump operation (operational storage), fire suppression (fire flow storage) and other emergency conditions (standby storage).

- Standby storage must be located above the elevation that yields a 20 psi service pressure to all services in the zone under peak hour demand conditions with the largest source out of service.

- Fire flow storage must be located above the elevation that yields a 20 psi service pressure to all services in the zone under peak day demand conditions.

- The City will provide sufficient standby storage for an emergency condition in which a major supply source is out of service. The volume of storage will be sufficient to maintain uninterrupted supply to the system during the emergency condition.

- The City will provide sufficient storage for a fire condition equal to the system's maximum fire protection water demand and the required duration.

- The City will have high-water level and low-water level alarms at the Operations and Maintenance office.

- A water level indicator will be located at the Operations and Maintenance office.

- Storage facilities will be located in areas where they will satisfy the following requirements:

    1. Minimize fluctuations in system pressure during normal demands;

    2. Maximize use of storage facilities during fires and peak demands; and

    3. Improve the reliability of supply to the City.

Transmission and Distribution

- Where practical, transmission and distribution mains will be looped to increase reliability and fire flow capacity and decrease head losses.

- All mains will comply with the generally recognized design criteria from the AWWA and Department of Health guidelines that follow.

    1. All new construction will be in accordance with the City of Stanwood Water System Standards, a copy of which is included in **Appendix H** of this WSP.

2. Distribution system design assumes that adequately-sized service lines will be used. All residential service lines will be 1-inch or larger. Service lines will be the same size as the meter or larger.

3. The minimum diameter of distribution mains will be 8 inches. Water mains not required to carry fire flow, as determined by the City, may be 6 inches in diameter. All water mains will be ductile iron pipe.

4. All new distribution mains will be sized by hydraulic analysis.

5. All new mains providing fire flow will be sized to provide the required fire flow at a minimum residual pressure of 20 psi and maximum pipeline velocity of 8 feet per second during peak day demand conditions. In general, new water mains that will carry fire flow in residential areas shall be a minimum of 8 inches in diameter and looped for multi-family residential developments. New water mains in commercial, business park, industrial and school areas shall be a minimum of 12 inches in diameter and looped.

6. Valve installations will satisfy the following criteria.

    a. Zone valves will be located at all pressure zone boundaries to allow future pressure zone realignment without the need for additional pipe construction.

    b. Isolation valves will be installed in the lines to allow individual pipelines to be shut down for repair or installing services. Unless it is impractical to do so, the distance between isolation valves will not exceed 1,000 feet. A minimum of three valves will be provided per cross and two valves per tee.

    c. Air/vacuum release valves will be placed at all high points, or "crowns", in all pipelines.

    d. Blowoff assemblies shall be located at main dead ends where there is not a fire hydrant. If a water main extension is expected in the future, the blowoff assembly shall have a valve the same size as the main with concrete thrust blocking.

    e. Individual pressure reducing or check valves must be installed in all new customer service lines in the City. Pressure reducing valves protect customers from high pressures in case a mainline pressure reducing station fails. Check valves prevent hot water tanks from emptying into the City's distribution system when a nearby water main is empty or when the pressure in the main is less than the pressure in the tank. Check valves also prevent contamination of the system's mains caused by possible cross-connections in the customer's pipes or fixtures.

7. Fire hydrant installations will satisfy the following criteria.

   a. Fire hydrants serving detached single family or duplex dwellings on individual lots will be located not more than 600 feet on center, such that all single family lots are within 300 feet from a fire hydrant, as measured along the path of vehicular access.

   b. Fire hydrants serving any use other than detached single family or duplex dwellings on individual lots will be located not more than 300 feet on center, and will be located so that at least one hydrant is located within 150 feet of all structures, but not closer than 50 feet, unless approved by the Stanwood Fire Department.

   c. Hydrants located in dead-end areas or cul-de-sacs shall service an area of no more than 120,000 square feet.

   d. One fire hydrant shall be installed per intersection.

   e. The Stanwood Fire Department will review all proposed fire hydrant installations to ensure the correct number and spacing of fire hydrants for each project.

Supply and Booster Pump Stations

- All existing and future booster pump stations will be modified/constructed to comply with the following minimum standards.

  1. All structures will be non-combustible, where practical.

  2. All buildings will have adequate heating, cooling, ventilation, insulation, lighting and work spaces necessary for on-site operation and repair.

  3. Sites will be fenced to reduce vandalism and City liability, where appropriate.

  4. Each station will be equipped with a flow meter and all necessary instrumentation to assist personnel in operating and troubleshooting the facility.

  5. Emergency power capability will be provided to at least one booster pump station supplying each pressure zone.

- Pumps will be operated automatically, with flexibility in pump start/stop settings.

- Stations will be operated with the provision for at least two methods of control, to minimize system vulnerability.

- Manual override of stations will be provided for and located at the Operations and Maintenance office using the City's telemetry and supervisory control system.

- Stations will be monitored with alarms for the following conditions.
    1. Pump started automatically or manually
    2. Power phase failure
    3. Communication failure
    4. Water in structure
    5. Low suction pressure
    6. High discharge pressure
- Stations will have the following indicators.
    1. Local flow indication and totalizing.
    2. Flow indication and totalizing at the Operations and Maintenance office.
    3. Recording of combined supply flow to the system.
- Booster pump stations will be placed wherever necessary to fulfill the following criteria.
    1. Provide supply redundancy to a pressure zone.
    2. Improve the hydraulic characteristics of a pressure zone.
    3. Maximize storage availability and transmission capacity.
    4. Improve water quality (i.e., increase circulation) and quantity.

Pressure Reducing Stations

- All pressure reducing valves will be placed in vaults that are large enough to provide ample workspace for field inspection and valve repair.
- Vaults will drain to daylight or will be equipped with sump pumps to prevent vault flooding.
- Pressure relief valves will be provided on the low pressure side of the pressure reducing valves to prevent system overpressurizing in case of a pressure reducing valve failure.

Control

- The City's control system must be capable of efficiently operating the water system's components in accordance with this WSP, and in response to reservoir levels, system pressures, abnormal system conditions, electrical power rate structure and water costs.

Maintenance

- Facility and equipment breakdown is given the highest maintenance priority. Emergency repairs will be made even if overtime labor is involved.
- Equipment will be scheduled for replacement when it becomes obsolete and as funding is available.
- Worn parts will be repaired, replaced or rebuilt before they represent a high failure probability.
- Spare parts will be stocked for all equipment items whose failure will impact the ability to meet other policy standards.
- Equipment that is out of service will be returned to service as soon as possible.
- A preventive maintenance schedule will be established for all facilities, equipment and processes.
- Tools will be obtained and maintained to repair all items whose failure will impact the ability to meet other policy standards.
- Dry, heated shop space will be available for maintenance personnel to maintain facilities.
- All maintenance personnel will be trained to efficiently perform their job descriptions.
- Maintenance will be performed by the water maintenance staff and supervised by the Field Supervisor.
- Written records and reports showing operation and maintenance history will be maintained on each facility and item of equipment.

Reliability

- Supply to the service area will be pursued to meet peak day demand during a reasonable worst case supply system failure.
- System planning will determine whether interties with adjacent systems will be reliable or available for use at saturation development or emergency situations.

- System demand planning will use historical demand data and assume all available land will be developed at saturation.

Vulnerability

- Supply vulnerability analyses will determine a reasonable worst case failure for the water system. The analyses will consider the following conditions.

  1. Failure of the single largest source of supply.

  2. Reservoir out of service.

- Storage vulnerability analyses will determine a worst case failure for the water system. The analyses will consider:

  1. Peak day demand with simultaneous fire; and

  2. Peak hour demand with the largest source of supply out of service.

Joint Use

- All joint use facilities (with other public water systems) must comply with City of Stanwood policies and design standards.

- All joint use facilities will be maintained by the Water Department.

- Joint use facilities will be pursued only in those areas that improve reliability or reduce operating costs.

FINANCIAL POLICIES

General

- The City will set rates that comply with standards established by the AWWA.

- Rates and additional charges established for the City should be:

  1. Cost-based rates that recover current, historical and future costs associated with the City's water system and services;

  2. Equitable charges to recover costs from customers, commensurate with the benefits they receive; and

3. Adequate and stable source of funds to cover the current and future cash needs of the City.

- The existing City customers will pay the direct and indirect costs of operating and maintaining the facilities through user rates. In addition, the user rates will include debt service incurred to finance the capital assets of the City.

- New customers seeking to connect to the water system will be required to pay a connection charge for an equitable share of the historical cost of the system and for the system's capital improvement program (CIP). Connection charge revenues will be used to fund the CIP in conjunction with rate revenue.

- New and existing customers will be charged for extra services through separate ancillary charges based on the costs to provide the services. Ancillary charges can increase equitability, as well as operating efficiency by discouraging unnecessary demand for services. The charges should be reviewed regularly and updated annually based on increases in the Consumer Price Index. Revenue from ancillary charges will be used to finance annual operations and maintenance.

- The City will maintain information systems that provide sufficient financial and statistical information to ensure conformance with rate setting policies and objectives.

- User charges must be sufficient to provide cash for the expenses of operating and maintaining the system. To ensure the fiscal and physical integrity of the utility, an amount should be set aside each year and retained for capital expenditures that will cover some portion of the depreciation of the physical plant. The amount may be transferred from the Maintenance Fund to the Construction Fund for general or specific purposes.

- A Working Capital Reserve will be maintained to cover unanticipated emergencies and fluctuations in cash flow.

- Water rates will be based on either the Base-Extra Capacity Method or the Commodity-Demand Method. Both methods strive to equitably charge customers with different service requirements based on the cost of providing water service. Service requirements relate to the total volume of water used, peak rates of use and other factors.

- Fees and charges are calculated for the service area as a whole. Rates will be the same regardless of the existing customers' service locations. Rates charged in annexed areas will be evaluated on an individual basis.

Connection Charges

- Owners of properties that have not been assessed, charged or borne an equitable share of the cost of the water system will pay one or more of the following connection charges prior to connection to a water main.

1. *Latecomers Fees:* Latecomers fees are negotiated with developers and property owners; they provide for the reimbursement of a pro rata portion of the original cost of the water system extensions and facilities.

2. *Connection Charge:* The connection charge will be assessed against any property that has not participated in the development of the water system. Meter charges, or hookup fees, are additional to recover the cost of meter and service line installation.

3. *Developer Extension Charges:* These charges are for the administration, review and inspection of a developer extension project.

ORGANIZATIONAL POLICIES

Staffing

- Personnel certification will comply with state standards.
- The Water Department will promote staff training.

Relationship with Other Departments

- The Finance Department is responsible for customer billing, payment collection, project cost accounting and fund activity reporting.
- The Personnel Department is responsible for employee records, union labor negotiations and salary schedules.
- The Fire Department uses water utility facilities for fire protection and establishes fire flow requirements.
- The Fire Department is responsible for emergency responses to hazardous events at water system facilities.
- The Police Department is responsible for enforcing violations of City water ordinances.
- The Fire Department is responsible for hydrant fire flow testing.
- The Fire and Water Departments are jointly responsible for fire hydrant testing.

Water Source and Quality

6

INTRODUCTION

The two basic objectives of a water system are to provide a sufficient quantity of water to meet customer usage demands and to provide high quality water. **Chapter 7** discusses the City of Stanwood's (City) ability to supply a sufficient quantity of water and identifies future source requirements. This chapter discusses the City's existing water sources, water rights, water quality regulations and water quality monitoring results.

EXISTING WATER SOURCES AND TREATMENT

Water Sources

All water supply to the City's water system is provided by four groundwater wells and one groundwater spring source. The five active sources that currently provide water to the system are Bryant Well No. 1, Bryant Well No. 2, Cedarhome Well, Fure Well and Hatt Slough Springs. Most of the water right from the City's old Sill Well were transferred to the Cedarhome Well in 2008. The Department of Ecology (Ecology) approved the transfer of 500 gallons per minute (gpm) and the City has since notified Ecology that the original Sill Well water right was issued for 600 gpm. Ecology has expressed a willingness to approve the transfer of the remaining 100 gpm provided that the City can demonstrate that the withdrawal of 600 gpm at this location will not result in an increase in seawater intrusion in the area.

The yield from Bryant Well No. 2 has been declining in recent years, and it currently serves as an emergency supply well. A replacement well is planned and, once completed, the Bryant Well No. 2 replacement will serve as a primary well in conjunction with Bryant Well No. 1. Additional information on each of the City's existing sources is presented in **Chapter 2** and contained in **Appendix B**.

Water Treatment

The City has historically chlorinated its water only at the Hatt Slough Springs source as a precautionary measure, even though harmful bacteria have never been detected. However, in 2004, the Department of Health (DOH) determined that a hydraulic connection exists between Bryant Well No. 1 and the nearby surface water source, Church Creek. As a result, the City is now required to provide disinfection at this source. The well is not classified as groundwater under the direct influence of surface water (GWI); therefore, it is not required to meet more stringent surface water treatment requirements. Following the classification of Bryant Well No. 1 as a source under hydraulic connection with surface water, the City constructed the Bryant Well Field Treatment Facility. The Bryant Well Field Treatment Facility chlorinates water produced from Bryant Well No. 1 after it is filtered with greensand media to reduce manganese and arsenic concentrations and is fed ferric chloride and sulfuric acid chemicals to assist with arsenic removal.

The Cedarhome Well was constructed in 2008 and provides chlorination treatment of the source water. Through the completion of the Bryant Well Field Treatment Facility and the Cedarhome Well, the City has implemented system-wide chlorination.

Groundwater is often fluoridated to assist in the prevention of tooth decay. The City has chosen not to fluoridate its water at this time.

WATER RIGHTS

Overview

A water right is a legal authorization to use a specified amount of public water for specific beneficial purposes. The water right amount is expressed in terms of instantaneous withdrawal rate and annual withdrawal volume. Washington State law requires users of public water to receive approval from the Ecology prior to actual use of the water. This approval is granted in the form of a water right permit or certificate. However, a water right is not required for certain purposes (typically individual residences) that use 5,000 gallons per day (gpd) or less of groundwater from a well.

The process for obtaining a water right involves obtaining a water right permit first, then a water right certificate. A water right permit provides permission to develop a water right by constructing, developing and testing the water source. A water right permit remains in effect until a water right certificate is issued (if all terms of the permit are met) or the permit has been canceled. A water right certificate is issued by Ecology following a review process and determination that the amount of water put to beneficial use is consistent with the amount and conditions indicated on the water right permit.

A water right permit is issued by Ecology, only if the proposed use meets the following requirements.

- Water will be put to beneficial use.
- There is no impairment to existing or senior rights.
- Water is available for appropriation.
- Issuance of the requested water right will not be detrimental to the public's interest.

The water right decision process also considers existing basin management plans, stream closures, instream flows, hydraulic continuity (surface water interconnected to groundwater), seawater intrusion, utilization of existing water sources, water conservation and availability of alternative water supplies, among other things. The water right decision process is increasingly becoming more complex and time consuming, due to the many competing interests for water, environmental issues and regulatory requirements.

Existing Water Rights

The City currently holds several water right permits and certificates for its sources of municipal water supply. A summary of these water rights is presented in **Table 6-1**. The City has acquired water right certificates for all of the sources shown in the table. A change application has been approved for the transfer of the Sill Well Water Right (CG1-04239CWRIS) to the new Cedarhome Well. Ecology has issued the Change Report of Exam approving this transfer and will issue the Superseding Certificate for this water right once the withdrawal of water at the Cedarhome Well site

is perfected. As stated previously, the transfer approved 500 gpm even though the original water right authorized the withdrawal of 600 gpm. Ecology has expressed the willingness to approve the transfer of the remaining 100 gpm if it can be shown that the transfer and withdrawal of the full 600 gpm will not result in seawater intrusion. The City has retained a consultant to assist in this determination.

The City was also issued Certificate of Groundwater Right 509 (G1-*00605S) with a priority date of May 1, 1918 that was abandoned during the construction of the new Pioneer Highway bridge. The original certificate was for an instantaneous quantity of 250 gpm and an annual quantity of 17 acre-feet per year. The well was historically used solely for Pictsweet Foods, later to become Stokely Van Camp and now currently Northstar. This well was eliminated during the construction of the bridge and is no longer in existence. Additional water rights information for each source may be found on the certificates, permits and water rights self assessment, which are included in **Appendix I**.

Table 6-1
Existing Water Rights

DOH No.	Source Name	Permit or Certificate Number	Old Certificate Number	Priority Date	Primary or Supplemental Right	Use	Existing Water Rights			
							Instantaneous		Annual	
							(gpm)	(cfs)	(acre-ft)	(gpm)
S01	Hatt Slough Springs	S1-02432CWRIS	1164 (old permit 1234)	9/28/1928	Primary	Permanent	1,122	2.5	1,810	1,122
S02	Bryant No. 1[1]	G1-00741CWRIS	615 (old permit 670)	2/20/1948	Primary	Permanent	2,000	4.5	2,400	1,487
S03	Bryant No. 2[1]	G1-00741CWRIS	615 (old permit 670)	2/20/1948	Primary	Emergency	2,000	4.5	2,400	1,487
S04	Fure Well	G1-01067CWRIS	616 (old permit 976)	2/11/1949	Primary	Emergency	150	0.3	121	75
S07	Cedarhome Well[2] (transferred from Sill Well)	CG1-04239	2986 (Sill Well)	3/6/1956 9/21/2001 (change)	Primary	Permanent	600	1.3	960	595

1 = Bryant Wells No. 1 and No. 2 are authorized by the same water right. Quantities shown are for the entire right, not each individual well.
2 = The change application for Cedarhome Well was approved for 500 gpm; however, the Sill Well water right was 600 gpm. Ecology agreed to approve the transfer of 600 gpm provided that it could be shown that the withdrawal of 600 gpm would not cause seawater intrusion. The City is working on developing this information for Ecology's review.

Water Rights Evaluation

An evaluation of the City's existing water rights was performed to determine the sufficiency of the water rights to meet both existing and future water demands. **Table 6-2** compares the combined maximum instantaneous water right amounts of the sources with the peak day demand of the system and the combined maximum annual water right amounts of the sources with the average day demand of the system. As shown in the table, the City has sufficient water rights (both instantaneous and annual amounts) to meet the demands of its existing customers.

Table 6-3 summarizes the results of the future water rights evaluation, which compares the water rights of the existing sources with the system's future 6-year and 20-year demand projections. The analysis considered future demand projections with and without water use reductions from the City's planned water use efficiency efforts, as shown in the table. The analysis assumes that the transfer of the remaining 100 gpm from the Sill Well will be approved by Ecology before 2013. The

results of the future water rights evaluation indicate the City has sufficient water rights to meet the demands through the year 2027.

Table 6-2
Existing Water Rights Evaluation

Description	Instantaneous Rights/ Peak Day Demand (gpm)	Annual Rights/ Average Day Demand (acre-feet)	Annual Rights/ Average Day Demand (gpm)
Total Certificated Water Rights	3,872	5,291	3,279
Existing (2007) Water Demand	1,663	1,068	662
Surplus (or Deficient) Rights	2,209	4,223	2,617

Table 6-3
Future Water Rights Evaluation

Description	Instantaneous Rights/ Peak Day Demand (gpm)	Annual Rights/ Average Day Demand (acre-ft)	Annual Rights/ Average Day Demand (gpm)
Year 2013 Without Water Use Efficiency Measures			
Total Certificated Water Rights	3,872	5,291	3,279
Projected (2013) Water Demand	1,974	1,268	786
Surplus (or Deficient) Rights	1,898	4,023	2,493
Year 2027 Without Water Use Efficiency Measures			
Total Certificated Water Rights	3,872	5,291	3,279
Projected (2027) Water Demand	2,715	1,745	1,082
Surplus (or Deficient) Rights	1,157	3,546	2,197
Year 2013 With Water Use Efficiency Measures			
Total Certificated Water Rights	3,872	5,291	3,279
Projected (2013) Water Demand	1,915	1,230	763
Surplus (or Deficient) Rights	1,957	4,061	2,516
Year 2027 With Water Use Efficiency Measures			
Total Certificated Water Rights	3,872	5,291	3,279
Projected (2027) Water Demand	2,498	1,605	995
Surplus (or Deficient) Rights	1,374	3,686	2,284

Water Rights Planning

Although the City has sufficient water rights to supply the water system through 2027 and likely beyond, water right transfers and facility improvements are necessary to fully utilize the existing water rights. The City is currently working on the transfer of the remaining 100 gpm from the Sill Well to the new Cedarhome Well. The City plans to examine options for increasing its withdrawal of water from the Hatt Slough Springs to better utilize its existing water right and provide additional redundancy within the system. Transfer of an inchoate portion of a surface water right to another location is severely constrained by the water code. Therefore, the City's best option may be to modify its water collection facilities at the present location to increase the yield of water. The City will evaluate these options and will work with Ecology as necessary to ensure that any actions are consistent with state law. Improvements to replace Bryant Well No. 2, which will result in full utilization of the water right shared with Bryant Well No. 1, are also planned.

The City will strive to use its existing water sources efficiently by continuing to support the water use efficiency measures outlined in the City's Water Use Efficiency Program, which is included in **Appendix F**. In addition, the City will accomplish the proposed improvements identified in **Chapter 9** to fully utilize the water right capacity and to provide additional redundancy for the existing supply sources. Although no plans have been proposed, the City will continue to consider future water supply interties.

LONG-TERM WATER SUPPLY PLANNING

The City's water system currently has no interties with other water systems. However, the *North Snohomish County Coordinated Water System Plan* (CWSP), discussed possible connections with the City of Arlington and Tatoosh water systems. Arlington currently has an intertie with the City of Marysville and the Snohomish County PUD, and Marysville has an intertie with the City of Everett. The most likely sources of backup or future water supply for the City are from the City of Everett and Tatoosh water systems.

DRINKING WATER REGULATIONS

Overview

The quality of drinking water in the United States is regulated by the Environmental Protection Agency (EPA). Under provisions of the Safe Drinking Water Act (SDWA), the EPA is allowed to delegate primary enforcement responsibility for water quality control to each state. In the State of Washington, DOH is the agency responsible for implementing and enforcing drinking water regulations. For the State of Washington to maintain primacy (delegated authority to implement requirements) under the SDWA, the State must adopt drinking water regulations that are at least as stringent as the federal regulations. In meeting these requirements, the state, in cooperation with the EPA, has published drinking water regulations that are contained in Chapter 246-290 WAC.

Existing Regulations

The SDWA was enacted in 1974 as a result of public concern about water quality. The SDWA sets standards for the quality of drinking water and requires water treatment if these standards are not met. The SDWA also sets water testing schedules and methods that water systems must follow. In 1986, the SDWA was amended as a result of additional public concern and frequent contamination

of groundwater from industrial solvents and pesticides. The 1986 amendments require water systems to monitor and treat for a continuously increasing number of water contaminants identified in the new federal regulations. The EPA regulated approximately 20 contaminants between 1974 and 1986. The 1986 amendments identified 83 contaminants that the EPA was required to regulate by 1989. Implementation of the new regulations has been marginally successful due to the complexity of the regulations and the associated high costs. To rectify the slow implementation of the new regulations, the SDWA was amended again and re-authorized in August of 1996.

In response to the 1986 SDWA amendments, the EPA established six rules known as the Phase I Rule, the Phase II and IIb Rules, the Phase V Rule, the Surface Water Treatment Rule, the Total Coliform Rule, and the Lead and Copper Rule. The EPA regulates most chemical contaminants through the Phase I, II, IIb and V Rules. Additional drinking water regulations have been published since these six rules were first established and the EPA is continually proposing new rules for promulgation. The City's currently active sources are affected by many of these current rules.

The EPA set two limits for each contaminant that is regulated under the rules. The first limit is a health goal, referred to as the Maximum Contaminant Level Goal (MCLG). The MCLG is zero for many contaminants, especially known cancer-causing agents (carcinogens). The second limit is a legal limit, referred to as the Maximum Contaminant Level (MCL). The MCLs are equal to or higher than the MCLGs. However, most MCLs and MCLGs are the same, except for contaminants that are regulated as carcinogens. The health goals (MCLGs) for these are typically zero because they cause cancer and it is assumed that any amount of exposure may pose some risk of cancer. A summary of each rule follows.

To fully understand the discussion that follows, a brief definition of several key terms is provided below.

- Organic Chemicals – Animal or plant produced substances containing carbon and other elements such as hydrogen and oxygen.
- Synthetic Organic Chemicals (SOCs) – Man-made organic substances, including herbicides, pesticides, and various industrial chemicals and solvents.
- Volatile Organic Chemicals (VOCs) – Chemicals, as liquid, that evaporate easily into the air.
- Inorganic Chemicals – Chemicals of mineral origin that are naturally occurring elements. These include metals such as lead and cadmium.

Phase I Rule

The Phase I Rule, which was the EPA's first response to the 1986 amendments, was published in the Federal Register on July 8, 1987 and became effective on January 9, 1989. This rule provided limits for eight VOCs that may be present in drinking water. VOCs are used by industries in the manufacturing of rubber, pesticides, deodorants, solvents, plastics and other chemicals. VOCs are found in everyday items such as gasoline, paints, thinners, lighter fluid, mothballs and glue, and are typically encountered at dry cleaners, automotive service stations and elsewhere in industrial processes. The City currently complies with all contaminant monitoring requirements under this rule.

Phase II and IIb Rules

The Phase II and IIb Rules were published in the Federal Register on January 30, 1991 and July 1, 1991 and became effective on July 30, 1992 and January 1, 1993, respectively. These rules updated and created limits for 38 contaminants (organics and inorganics), of which 27 were newly regulated. Some of the contaminants are frequently applied agricultural chemicals (nitrate), while others are more obscure industrial chemicals. The City currently complies with all contaminant monitoring requirements under this rule.

Phase V Rule

The Phase V Rule was published in the Federal Register on July 17, 1992 and became effective on January 17, 1994. This rule set standards for 23 additional contaminants, of which 18 are organic chemicals (mostly pesticides and herbicides) and 5 are inorganic chemicals (such as cyanide). The City currently complies with all contaminant monitoring requirements under this rule.

Surface Water Treatment Rule

The Surface Water Treatment Rule (SWTR) was published in the Federal Register on June 29, 1989 and became effective on December 31, 1990. Surface water sources, such as rivers, lakes and reservoirs (which are open to the atmosphere and subject to surface runoff), and groundwater sources that are under the direct influence of surface water (referred to as GWI sources), are governed by this rule. The SWTR seeks to prevent waterborne diseases caused by the microbes *Cryptosporidium, Legionella* and *Giardia lamblia*, which are present in most surface waters. The rule requires disinfection of all surface water sources and GWI sources. All surface water sources and GWI sources must also be filtered, unless a filtration waiver is granted. A filtration waiver may be granted to systems with pristine sources that continuously meet stringent source water quality and protection requirements. The City does not currently have any sources that are classified as surface water or GWI; therefore, this rule does not currently affect the City.

Interim Enhanced Surface Water Treatment Rule

The EPA proposed the Interim Enhanced Surface Water Treatment Rule (IESWTR) on July 29, 1994. The final rule was published in the Federal Register on December 16, 1998 and became effective on February 16, 1999, concurrent with the Stage 1 Disinfectants/Disinfection By-products Rule. The rule primarily applies to public water systems that serve 10,000 or more people and use surface water or GWI sources. The rule also requires primacy agencies (i.e., DOH in Washington State) to conduct sanitary surveys of all surface water and GWI systems, regardless of size. The rule is the first to directly regulate the protozoan Cryptosporidium and has set the MCLG for Cryptosporidium at zero. Water systems affected by this rule needed to comply with it by December 16, 2001. The City does not currently have any sources that are classified as surface water or GWI; therefore, this rule does not currently affect the City.

Long Term 1 Enhanced Surface Water Treatment Rule

This is the follow-up rule to the IESWTR, which became effective in December of 1998. The final Long Term 1 Enhanced Surface Water Treatment Rule (LT1ESWTR) was published on January 14, 2002 and became effective February 13, 2002. The rule addresses water systems using surface water or groundwater under the direct influence of surface water serving fewer than 10,000 people. The

rule extends protections against Cryptosporidium for smaller water systems. The City does not currently have any sources that are classified as surface water or GWI; therefore, this rule does not currently affect the City.

Total Coliform Rule

The Total Coliform Rule was published in the Federal Register on June 29, 1989 and became effective on December 31, 1990. The rule set both health goals (MCLGs) and legal limits (MCLs) for total coliform levels in drinking water, and the type and frequency of testing that is required for water systems. The rule requires more monitoring than prior requirements, especially for small systems. In addition, every public water system is required to develop a coliform monitoring plan, subject to approval by DOH.

Coliform is a group of bacteria, some of which live in the digestive tract of humans and many animals, and are excreted in large numbers with feces. Coliform can be found in sewage, soils, surface waters and vegetation. The presence of any coliform in drinking water indicates a potential health risk and potential waterborne disease outbreak, which may include gastroenteric infections, dysentery, hepatitis, typhoid fever, cholera and other infectious diseases.

The rule established the health goal for total coliform at zero. To comply with the legal limit, systems may not find coliform in more than 5 percent of the samples taken each month. For systems like the City that must take eight samples per month, one sample that contains coliform would exceed the legal limit and trigger the follow-up sampling requirements. A copy of the City's coliform monitoring plan is contained in **Appendix J**.

Lead and Copper Rule

The Lead and Copper Rule was published in the Federal Register on June 7, 1991 and became effective on December 7, 1992. On January 12, 2000, the EPA published minor revisions to the rule in the Federal Register, which primarily improved the implementation of the rule. On June 29, 2004, additional minor revisions and clarifications on several requirements of the Lead and Copper Rule were published by the EPA. The rule identifies action levels for both lead and copper. An action level is different than an MCL. An MCL is a legal limit for a contaminant, and an action level is a trigger for additional prevention or removal steps. The action level for lead is greater than 0.015 mg/L. The action level for copper is greater than 1.3 mg/L. If the 90th percentile concentration of either lead or copper from the group of samples exceeds these action levels, a corrosion control study must be undertaken to evaluate strategies and make recommendations for reducing the lead or copper concentration below the action levels. The rule requires systems that exceed the lead level to educate the affected public about reducing its lead intake. Systems that continue to exceed the lead action level after implementing corrosion control and source water treatment may be required to replace piping in the system that contains lead sources. Corrosion control is typically accomplished by increasing the pH of the water to make it less corrosive, which reduces its ability to break down water pipes and absorb lead or copper.

Lead is a common metal found throughout the environment in lead-based paint, air, soil, household dust, food, certain types of pottery, porcelain, pewter, brass and water. Lead can pose a significant health risk if too much of it enters the body. Lead builds up in the body over many years and can cause damage to the brain, red blood cells and kidneys. The greatest risk is to young children and pregnant women. Lead can slow normal mental and physical development of growing bodies.

Copper is a common, natural and useful metal found in our environment. It is also a trace element needed in most human diets. The primary impact of elevated copper levels in water systems is stained plumbing fixtures. At certain levels (well above the action levels), copper may cause nausea, vomiting and diarrhea. It can also lead to serious health problems in people with Wilson's disease. Long-term exposure to elevated levels of copper in drinking water could also increase the risk of liver and kidney damage. The City currently complies with all contaminant monitoring and treatment requirements under this rule.

Radionuclides Rule

The EPA established interim drinking water regulations for radionuclides in 1976 under the SDWA. MCLs were established for alpha, beta and photon emitters, and radium 226/228. Radionuclides are elements that undergo a process of natural decay and emit radiation in the form of alpha or beta particles and gamma photons. The radiation can cause various kinds of cancers, depending on the type of radionuclide exposure from drinking water. The regulations address both man-made and naturally occurring radionuclides in drinking water.

The 1986 amendments to the SDWA finalized the regulations for radionuclides by eliminating the term "interim." The amendments also directed the EPA to promulgate health-based MCLGs, as well as MCLs. The EPA failed to meet the statutory schedules for promulgating the radionuclide regulations, which resulted in a lawsuit. In 1991, the EPA proposed revisions to the regulations but a final regulation based on the proposal was never promulgated. The 1996 amendments to the SDWA directed the EPA to revise a portion of the earlier proposed revisions, adopt a schedule, and review and revise the regulations every six years, as appropriate, to maintain or improve public health protection. Subsequent to the 1996 amendments, a 1996 court order required the EPA to either finalize the 1991 proposal for radionuclides or to ratify the existing standards by November 2000.

The final rule was published in the Federal Register on December 7, 2000 and became effective on December 8, 2003. The rule established an MCLG of zero for the four regulated contaminates and MCLs of 5 pCi/L for combined radium-226 and radium-228, 15 pCi/L for gross alpha (excluding radon and uranium), 4 mrem/year for beta particle and photon radioactivity and 30 ug/L for uranium. The City currently complies with all contaminant monitoring requirements under this rule.

Wellhead Protection Program

Section 1428 of the 1986 SDWA amendments mandates that each state develop a wellhead protection program. The Washington State mandate for wellhead protection and the required elements of a wellhead protection program are contained in WAC 246-290-135, Source Protection, which became effective in July of 1994. In Washington State, DOH is the lead agency for the development and administration of the State's wellhead protection program.

A wellhead protection program is a proactive and ongoing effort of a water purveyor to protect the health of its customers by preventing contamination of the groundwater that it supplies for drinking water. All federally defined Group A public water systems that use groundwater as their source are required to develop and implement a wellhead protection program. All required elements of a local wellhead protection program must be documented and included in either the Comprehensive Water System Plan (applicable to the City) or a Small Water System Management Program document (not

applicable to the City). A copy of the City's Wellhead Protection Program is contained in **Appendix K**.

Consumer Confidence Report

The final rule for the Consumer Confidence Report (CCR) was published in the Federal Register on August 19, 1998 and became effective on September 18, 1998. Minor revisions were posted in the Federal Register on May 4, 2000. The CCR is the centerpiece of the right-to-know provisions of the 1996 amendments to the SDWA. All community water systems, like the City, were required to issue the first report to customers by October 19, 1999. The annual report must be updated and re-issued to all customers by July 1st of each year thereafter.

The CCR is a report on the quality of water that was delivered to the system during the previous calendar year. The reports must contain certain specific elements but may also contain other information that the purveyor deems appropriate for public education. Some, but not all, of the information that is required in the reports includes the source and type of the drinking water, type of treatment, contaminants that have been detected in the water, potential health effects of the contaminants, identification of the likely source of contamination, violations of monitoring and reporting, and variances or exemptions to the drinking water regulations. A copy of the City's latest CCR is contained in **Appendix L**.

Stage 1 Disinfectants/Disinfection By-products Rule

Disinfection by-products (DBPs) are formed when free chlorine reacts with organic substances, most of which occur naturally. These organic substances (called precursors) are a complex and variable mixture of compounds. The DBPs themselves may pose health risks. Trihalomethanes are a category of DBPs that had been regulated previous to this rule. However, systems with groundwater sources that serve a population of less than 10,000 were not previously required to monitor for trihalomethanes.

The EPA proposed the Stage 1 Disinfectants/Disinfection By-products Rule (D/DBPR) on July 29, 1994. The final rule was published in the Federal Register on December 16, 1998 and became effective on February 16, 1999. The rule applies to the City and most other water systems, including systems serving fewer than 10,000 people, that add a chemical disinfectant to the drinking water during any part of the treatment process. The rule reduced the MCL for total trihalomethanes, which are a composite measure of four individual trihalomethanes, from the previous interim level of 0.10 mg/L to 0.08 mg/L. The rule established MCLs and requires monitoring of three additional categories of DBPs (0.06 mg/L for five haloacetic acids, 0.01 mg/L for bromate and 1.0 mg/L for chlorite). The rule established maximum residual disinfectant levels for chlorine (4.0 mg/L), chloramines (4.0 mg/L) and chlorine dioxide (0.8 mg/L). The rule also requires systems using surface water or groundwater directly influenced by surface water to implement enhanced coagulation or softening to remove DBP precursors, unless alternative criteria are met. Compliance with this rule must have been satisfied by December 16, 2001 for large surface water systems (those serving over 10,000 people) and by December 16, 2003 for smaller surface water systems and all groundwater systems (i.e., the City). The City currently complies with all contaminant monitoring requirements under this rule.

Unregulated Contaminant Monitoring Regulation

The EPA established the Unregulated Contaminant Monitoring Regulation (UCMR) to generate data on contaminants that are being considered for inclusion in new drinking water standards. The information collected by select public water systems will ensure that future regulations established by the EPA are based on sound science. The rule was first published in the Federal Register on September 17, 1999 and was subsequently amended on March 2, 2000 and January 11, 2001. The UCMR became effective on January 1, 2001.

Three separate lists of unregulated contaminants are maintained under the UCMR: List 1, List 2 and List 3. Contaminants are organized on the tiered lists based on the availability of standard testing procedures and the known occurrence of each contaminant, with List 1 containing contaminants that have established standard testing procedures and some, but insufficient, information on their occurrence in drinking water. Monitoring for contaminants on the three lists is limited to a maximum of 30 contaminants within a 5-year monitoring cycle, and the EPA is required to publish new contaminant monitoring lists every 5 years. As new lists are published, contaminants will be moved up in the lists if adequate information is found to support additional monitoring. All public water systems serving more than 10,000 people and a randomly selected group of smaller water systems are required to monitor for contaminants. The City currently monitors for some unregulated contaminants.

Arsenic

The EPA established interim drinking water regulations for arsenic in 1976 under the SDWA. Arsenic is highly toxic, affects the skin and nervous system, and may cause cancer. The 1996 SDWA amendments require the EPA to conduct research to assess health risks associated with exposure to low levels of arsenic. The EPA issued a proposed regulation on June 22, 2000 and allowed a 90-day public review period. The final rule, which was published in the Federal Register on January 22, 2001, was to become effective on March 23, 2001, except for certain amendments to several sections of the rule. Because of the national debate regarding the science and costs related to the rule however, the EPA announced on May 22, 2001, that it was delaying the effective date for the rule to allow time to reassess the rule and to afford the public a full opportunity to provide further input. On October 31, 2001 the EPA reaffirmed the final rule as published on January 22, 2001. The Arsenic Rule subsequently became effective on February 22, 2002.

The rule sets the MCLG of arsenic at zero and reduces the MCL from the previous standard of 0.05 mg/L to 0.01 mg/L. Arsenic's monitoring requirements will be consistent with the existing requirements for other inorganic contaminants. The regulation required the City to begin monitoring by January 23, 2006. The results of this monitoring have indicated elevated levels of arsenic in the source water from Bryant Well Nos. 1 and 2. The City complies with this rule by removing arsenic at the Bryant Well Field Treatment Facility prior to distribution to the City's customers.

Filter Backwash Recycling Rule

The 1996 SDWA amendments required the EPA to promulgate a regulation governing the recycling of filter backwash water within public water system's treatment processes. Public water systems using surface water or groundwater under the direct influence of surface water that utilize filtration processes and recycling must comply with this rule. The rule aims to reduce risks associated with

recycling contaminants removed during filtration. The EPA issued a proposed regulation on June 22, 2000 and allowed a 90-day public review period. The final rule was published in the Federal Register on June 8, 2001 and became effective on August 7, 2001.

The rule requires filter backwash water be returned to a location that allows complete treatment. In addition, filtration systems must provide detailed information regarding the treatment and recycling process to the state. The regulation requires water systems to have complied with the rule starting December 8, 2003 if filter backwash water was recycled. The Bryant Well Field Treatment Facility backwash recycle method meets the requirements of this rule.

Stage 2 Disinfectants/Disinfection By-products Rule

This rule is the second part of the Disinfectants/Disinfection By-products Rule, of which Stage 1 D/DBPR became effective in February 1999. The Stage 2 Disinfectants/Disinfection By-products Rule (Stage 2 D/DBPR) was published on January 4, 2006 in the Federal Register and became effective on March 6, 2006. The EPA implemented this rule simultaneously with the Long Term 2 Enhanced Surface Water Treatment Rule.

Similar to the Stage 1 D/DBPR, this rule applies to most water systems that add a disinfectant to the drinking water other than ultraviolet light or those systems which deliver such water. The Stage 2 D/DBPR changes the calculation procedure requirement of the MCLs for two groups of disinfection by-products, total trihalomethanes and haloacetic acids (TTHM and HAA5). The rule requires each sampling location to determine compliance with MCLs based on their individual annual average DBP levels (termed the Locational Running Annual Average), rather than utilizing a system-wide annual average. The rule also proposes new MCLGs for chloroform (0.07 mg/L), trichloroacetic acid (0.02 mg/L) and monochloroacetic acid (0.03 mg/L).

Additionally, the rule requires systems to document peak DBP levels and prepare an Initial Distribution System Evaluation (IDSE) to identify Stage 2 D/DBPR compliance monitoring sites. IDSEs require each water system to prepare a separate IDSE plan and report, with the exception of those systems who obtain a 40/30 Certification or a Very Small System Waiver. In order to qualify for the 40/30 Certification, all samples collected during Stage 1 monitoring must have TTHM and HAA5 levels less than or equal to 0.040 mg/L and 0.030 mg/L, respectively. The first stage of the IDSE schedule required systems serving 100,000 or more people to submit IDSE plans by October 1, 2006. Systems serving 50,000 to 99,999 people had to submit IDSE plans by April 1, 2007, while systems serving 10,000 to 49,999 people had to submit plans by October 1, 2007. Systems serving fewer than 10,000 people must submit an IDSE plan by April 1, 2008 if they did not qualify for 40/30 Certification or a Very Small System Waiver. The City currently complies with all contaminant monitoring requirements under this rule and has completed its IDSE plan, which is included in **Appendix J**.

Long Term 2 Enhanced Surface Water Treatment Rule

Following the publishing of the Interim Enhanced Surface Water Treatment Rule, the EPA introduced the Long Term 1 Enhanced Surface Water Treatment Rule to supplement the preceding regulations. The second part of the regulations of the Long Term 1 Enhanced Surface Water Treatment Rule (LT1ESWTR), which became effective in February 2002, are mandated in the Long Term 2 Enhanced Surface Water Treatment Rule (LT2ESWTR). The final rule was published in the Federal Register on January 5, 2006 and became effective on March 6, 2006. The final rule was

implemented simultaneously with the Stage 2 D/DBPR described in the previous section. This rule applies to all systems that use surface water or GWI sources.

This rule establishes treatment technique requirements for filtered systems based on their risk level for contamination, calculated from the system's average Cryptosporidium concentration. Requirements include up to 2.5-log Cryptosporidium treatment in addition to existing requirements under the IESWTR and LT1ESWTR. Filtered systems that demonstrate low levels of risk will not be required to provide additional treatment. Unfiltered systems under this rule must achieve at least a 2-log inactivation of Cryptosporidium if the mean level in the source water remains below 0.01 oocysts/L. If an unfiltered system's mean level of Cryptosporidium exceeds 0.01 oocysts/L, the LT2ESWTR requires the system to provide a minimum 3-log inactivation of Cryptosporidium. All unfiltered systems are also required to utilize a minimum of two disinfectants in their treatment process.

The LT2ESWTR also addresses systems with unfinished water storage facilities. Under this rule, systems must either cover their storage facilities or achieve inactivation and/or removal of 4-log virus, 3-log *Giardia lamblia* and 2-log Cryptosporidium on a state-approved schedule. Lastly, the rule extends the requirement of the disinfection profiles mandated under the LT1ESWTR to the proposed Stage 2 D/DBPR. Since this rule applies only to systems that use surface water or GWI sources, it does not impact the City.

Groundwater Rule

The EPA promulgated the Groundwater Rule (GWR) to reduce the risk of exposure to fecal contamination that may be present in public water systems that use groundwater sources. The GWR also specifies when corrective action (which may include disinfection) is required to protect consumers who receive water from groundwater systems from bacteria and viruses. The GWR applies to public water systems that use groundwater and to any system that mixes surface and groundwater if the groundwater is added directly to the distribution system and provided to consumers without treatment equivalent to surface water treatment. The final rule was published in the Federal Register on November 8, 2006 and became effective on January 8, 2007.

The rule targets risks through an approach that relies on the four following major components.

1. Periodic sanitary surveys of groundwater systems that require the evaluation of eight critical elements and the identification of significant deficiencies (such as a well located near a leaking septic system). States must complete the initial survey for most community water systems by December 31, 2012, and for community water systems with outstanding performance and all non-community water systems by December 31, 2014. DOH conducted its most recent sanitary survey of the City's water system on October 4, 2007 under the state's existing sanitary survey program.
2. Source water monitoring to test for the presence of E. coli, enterococci or coliphage in the sample. There are two monitoring provisions.
    - Triggered monitoring for systems that do not already provide treatment that achieves at least 99.99 percent (4-log) inactivation or removal of viruses and that have a total coliform positive routine sample under the Total Coliform Rule sampling in the distribution system.

- Assessment monitoring is a complement to triggered monitoring. A state has the option to require systems to conduct source water assessment monitoring at any time to help identify high risk systems.

3. Corrective actions required for any system with a significant deficiency or source water fecal contamination. The system must implement one or more of the following corrective action options: correct all significant deficiencies; eliminate the source of contamination; provide an alternate source of water; or provide treatment that reliably achieves 99.99 percent inactivation or removal of viruses.
4. Compliance monitoring to ensure that treatment technology installed to treat drinking water reliably achieves at least 99.99 percent inactivation or removal of viruses.

The compliance date for requirements of this rule other than the sanitary survey is December 1, 2009. The City is currently addressing deficiencies identified in the previous sanitary survey and is prepared to comply with all other requirements of the rule.

Future Regulations

Drinking water regulations are continuously changing in an effort to provide higher quality and safer drinking water. Modifications to the existing rules described above and implementation of new rules are planned for the near future. A summary of upcoming drinking water regulations that will most likely affect the City is presented below.

Radon

In July of 1991, the EPA proposed a regulation for radon, as well as three other radionuclides. The 1996 SDWA amendments required the EPA to withdraw the 1991 proposal due to several concerns that were raised during the comment period. A new proposed regulation was published in the Federal Register on November 2, 1999. Comments on the proposed rule were due to the EPA by February 4, 2000. Final federal requirements for addressing radon are delayed until 2008 but have not yet been published. The rule proposes a 300 pCi/L MCL for community water systems that use groundwater or an alternative, less stringent MCL of 4,000 pCi/L for water systems where their state implements an EPA-approved program to reduce radon risks in household indoor air and tap water. It is not currently known when or what a radon regulation may require as adopted by the EPA or what the implementation schedule for the rule will be. Because the final radon rule requirements are uncertain, the impact of this rule on the City is unknown at this time.

Unregulated Contaminant Monitoring Regulation Revisions

In accordance with the original Unregulated Contaminant Monitoring Regulation (UCMR), the EPA is proposing an updated contaminant monitoring list for the next five-year monitoring cycle, in addition to other minor revisions to the UCMR. The proposed rule was published August 22, 2005 in the Federal Register, and the comment period for the proposed revisions closed on October 21, 2005. The proposed revisions include a list of 26 chemicals that will be monitored during the 2007 through 2011 monitoring cycle, and approves several new testing methods to conduct the monitoring. For this upcoming cycle, all systems serving more than 100,000 people and a larger representative sample of smaller water systems than mandated under the original rule will be required to monitor for contaminants. The rule also requires additional water system data to be

reported with the monitoring results, establishes a procedure for determining minimum reporting levels and proposes several revisions to the implementation of the monitoring program.

SOURCE WATER QUALITY

This section presents the current water quality standards for groundwater sources and the results of the City's recent source water quality monitoring efforts. A discussion of the water quality requirements and monitoring results for the City's distribution system is presented in the section that follows.

Drinking Water Standards

Drinking water quality is regulated at the Federal level by the EPA and at the State level by DOH. Drinking water standards have been established to maintain high quality drinking water by limiting the levels of specific contaminants (i.e., regulated contaminants) that can adversely affect public health and are known or likely to occur in public water systems. Non-regulated contaminants do not have established water quality standards and are generally monitored at the discretion of the water purveyor and in the interest of customers.

The regulated contaminants are grouped into two categories of standards – primary and secondary. Primary standards are drinking water standards for contaminants that could affect health. Water purveyors are required by law to monitor and comply with these standards and notify the public if water quality does not meet any one of the standards. Secondary standards are drinking water standards for contaminants that have aesthetic effects, such as unpleasant taste, odor or color (staining). The national secondary standards are unenforceable federal guidelines or goals where federal law does not require water systems to comply with them. However, states may adopt their own enforceable regulations governing these contaminants. The State of Washington has adopted regulations that require compliance with some of the secondary standards. Water purveyors are not required to notify the public if water quality does not meet the secondary standards.

Source Monitoring Requirements and Waivers

The City is required to perform water quality monitoring at each of its active sources for inorganic chemical and physical substances, organic chemicals and radionuclides. The monitoring requirements that the City must comply with are specified in WAC 246-290-300. A description of the source water quality monitoring requirements and procedures for each group of substances is contained in the City's Water Quality Monitoring Plan, which is included as **Appendix J**.

In 1994, DOH developed the Susceptibility Assessment Survey Form for water purveyors to complete for use in determining a drinking water source's potential for contamination. The results of the susceptibility assessment may provide monitoring waivers that allow reduced source water quality monitoring. Based on the results of the susceptibility assessment survey for each source, DOH assigned a moderate susceptibility rating to Bryant Well No. 1, a low susceptibility rating to Bryant Well No. 2 and a high susceptibility rating for Hatt Slough Springs. The susceptibility rating for the recently completed Cedarhome Well is currently being assessed by DOH. The sources were granted a susceptibility waiver that allowed the City to avoid monitoring of ethylene dibromide and other soil fumigants, dioxin, endothall, diquat and glyphosphate.

Source Monitoring Results

The quality of the City's groundwater sources has been good and meets or exceeds all drinking water standards, except for slightly higher than allowable levels of manganese and arsenic at Bryant Well No. 1. The City monitored each source for volatile organic chemicals (VOCs) and inorganic chemicals and physical substances once during each of the two past compliance periods. Nitrate monitoring has been performed annually since 2000. As required by DOH, monitoring for radionuclides was completed twice during the 2005 to 2007 compliance period and once during the previous compliance period.

The results of inorganic chemical (including nitrate) and VOC monitoring for the City's sources indicate that all primary standards were met. All secondary standards were also met at the sources, except for high arsenic levels at the Bryant Wells and high manganese levels at the Bryant and Fure Wells. The Bryant Well Field Treatment Facility was recently installed to meet these secondary water quality standards at the Bryant Wells. Water produced from the Fure Well is typically mixed with other sources and is only used as an emergency backup supply to the system. Because of this, the Fure Well does not require treatment to remove manganese from its source water at this time.

DISTRIBUTION SYSTEM WATER QUALITY

Monitoring Requirements and Results

The City is required to perform water quality monitoring within the distribution system for coliform bacteria, disinfectant (chlorine) residual concentration, disinfection by-products, lead and copper, and asbestos in accordance with Chapter 246-290 WAC. A description of the distribution system water quality monitoring requirements and procedures are contained in the City's Water Quality Monitoring Plan that is included in **Appendix J**.

The City has been in compliance with all monitoring requirements for the past several years, except for some coliform violations that are described in the following section. A summary of the results of the distribution system water quality monitoring within the City's system is also presented.

Coliform Monitoring

Water samples tested positive for coliform in 2000, 2002, 2003, 2006 and 2007. However, for each of these positive samples, coliform bacteria was not detected in distribution samples for more than two consecutive months. The cause of the unsatisfactory samples is unknown, but may have resulted from contamination during sample collection or lab error. In 2008, the City transitioned to a fully chlorinated water system through the addition of the Cedarhome Well and the Bryant Well Field Treatment Facility. The City should have a permanent disinfecting residual to ensure the absence of coliform bacteria at all times. Based on the City's current population, a minimum of eight coliform samples per month from different locations throughout the system are required to be collected.

Disinfectant Residual Concentration Monitoring

Disinfection requirements applicable to the City are contained in WAC 246-290-310, which states that a disinfectant residual concentration shall be detectable in all active parts of the distribution system and that the maximum residual disinfectant level shall be 4.0 mg/L for chlorine and

chloramines. The City's chlorination target is to maintain a residual disinfectant concentration of at least 0.2 mg/L in the distribution system. Since the Bryant Well No. 1 was found to be in hydraulic connection with surface water, a CT of six is required at this source. This is equivalent to a free chlorine residual of 0.2 mg/L after the plant's contact loop; however, the free chlorine residual is typically maintained much higher, between 0.5 and 0.8 mg/L. The water samples collected by the City for coliform analysis are also tested for residual disinfectant concentration. The results of residual disinfectant concentration tests indicate that the City is in compliance with the regulations.

Disinfectants/Disinfection By-products Monitoring

Trihalomethanes (THM) and haloacetic acids (HAA5) are disinfection by-products that are formed when free chlorine reacts with organic substances (i.e., precursors), most of which occur naturally. Formation of THM and HAA5 are dependent on such factors as amount and type of chlorine used, water temperature, concentration of precursors, pH and chlorine contact time. Trihalomethanes have been found to cause cancer in laboratory animals and are suspected to be human carcinogens. The City's most recent samples for THM and HAA5 in 2004, 2009 and 2010 revealed concentrations lower than their MCLs. Therefore, the City is in compliance with this regulation.

In response to the Stage 1 and Stage 2 D/DBPR, the City expanded their distribution system monitoring to include THM and HAA5. The City also completed an Initial Distribution System Evaluation (IDSE) standard monitoring plan, which was submitted to the EPA for compliance. The IDSE standard monitoring plan is included in **Appendix J**. The City has gathered all the water quality data identified in this plan and will be submitting an IDSE report for standard monitoring to the DOH by July 1, 2010 in order to determine their routine Stage 2 D/DBPR monitoring locations.

Lead and Copper Monitoring

The Lead and Copper Rule identifies the action level for lead as being greater than 0.015 mg/L and the action level for copper as being greater than 1.3 mg/L. The results of the tests from 2003, which included 18 sample sites, indicated a range of less than 0.002 mg/L to 0.003 mg/L for lead and a range of less than 0.028 mg/L to 0.20 mg/L for copper. The results of the tests from 2006, which included 20 sample sites, indicated a range of less than 0.001 mg/L to 0.004 mg/L for lead and a range of less than 0.02 mg/L to 0.162 mg/L for copper. These results have all been satisfactory, since the 90th percentile concentration of either lead or copper from each group of samples has not exceeded the action levels.

Asbestos

Asbestos monitoring is required if the sources are vulnerable to asbestos contamination or if the distribution system contains more than 10 percent of asbestos cement pipe. Although none of the City's sources are susceptible to asbestos contamination, asbestos cement (AC) pipe comprises approximately 23 percent of the City's distribution system. Therefore, the City must monitor for asbestos in the distribution system. The current MCL for asbestos is 7 million fibers per liter and greater than 10 microns in length. Monitoring must be accomplished during the first three-year compliance period of each nine-year compliance cycle. The water sample must be taken at a tap that is served by an asbestos cement pipe under conditions where asbestos contamination is most likely to occur. The City's most recent sample in 1999 did not contain asbestos contamination.

Water System Analysis

7

INTROUCTION

This chapter presents the analysis of the City of Stanwood's (City) existing water system. Individual water system components were analyzed to determine their ability to meet policies and design criteria under existing and future water demand conditions. The policies and design criteria are presented in **Chapter 5**, and the water demands are presented in **Chapter 4**. A description of the water system facilities and current operation is presented in **Chapter 2**. The last section of this chapter presents the existing system capacity analysis that was performed to determine the maximum number of equivalent residential units (ERUs) that can be served by the City's existing water system.

PRESSURE ZONES

The ideal static pressure of water supplied to customers is between 40 and 80 pounds per square inch (psi). Pressures within a water distribution system are commonly as high as 120 psi, requiring pressure regulators on individual service lines to reduce the pressure to 80 psi or less. It is difficult for the City's water system (and most others) to maintain distribution pressures between 40 and 80 psi, primarily due to the topography of the water service area.

Table 7-1 lists each of the City's eight pressure zones, the highest and lowest elevation served in each zone, and the minimum and maximum distribution system pressures within each zone based on maximum static water conditions (full reservoirs with no demand). The upper portion of the table illustrates the minimum and maximum pressures of the existing system, and the lower portion of the table illustrates pressures after proposed pressure zone improvements are implemented. While this table presents the results of the pressure evaluations based on the adequacy of the pressure zones under static conditions, the hydraulic analysis section later in this chapter presents the results of the pressure evaluations based on the adequacy of the water mains under dynamic conditions.

The City is currently providing water at pressures of at least 40 psi to all services in each zone except for the 125, 255, and 297 Zones, as shown in **Table 7-1**. The low pressures in the 125 Zone occur in the area of higher elevations near the Bailey Reservoirs and along Old Pacific Highway in the northwest portion of the system. The low pressures in the 297 Zone occur in the higher elevations near the Knittle Reservoirs. These low pressure areas will be eliminated in the future with the completion of the proposed pressure zone improvements described in **Chapter 9** that are scheduled to occur within the 6-year planning period. The pressures in all of the zones after the completion of the pressure zone improvements are shown in the lower portion of **Table 7-1**.

Table 7-1
Minimum and Maximum Distribution System Static Pressures

Pressure Zone	Highest Elevation Served		Lowest Elevation Served	
	Elevation (feet)	Static Pressure (psi)	Elevation (feet)	Static Pressure (psi)
Existing System - Before Proposed Zone Modifications				
125 Zone	57	29	0	54
242 Zone	111	57	69	75
252 Zone	140	49	88	71
255 Zone	172	36	25	100
265 Zone	158	46	56	91
297 Zone	224	32	31	115
365 Zone	252	49	173	83
Future System - After Proposed Zone Modifications				
125 Zone	31	41	0	54
200 Zone	79	52	9	83
245 Zone	126	52	8	103
297 Zone	198	43	31	115
365 Zone	252	49	173	83

The highest pressure in the system occurs along Pioneer Highway in the 297 Zone. Individual services that have pressures greater than 80 psi should have pressure regulators to reduce the pressures to acceptable levels.

SOURCE CAPACITY EVALUATION

This section evaluates the combined capability of the City's existing sources (four groundwater wells and one spring source) to determine if they have sufficient capacity to meet the overall demands of the system based on existing and future water demands. The section that follows will address the evaluation of the individual facilities to determine if they have sufficient capacity to meet the existing and future demands of the individual zone, or zones, that they supply.

Analysis Criteria

Supply facilities must be capable of adequately and reliably supplying high quality water to the system. In addition, supply facilities must provide a sufficient quantity of water at pressures that meet the requirements of WAC 246-290-230. The evaluation of the combined capacity of the sources in this section is based on the criteria that they provide supply to the system at a rate that is equal to or greater than the peak day demand of the system.

Source Capacity Analysis Results

The combined capability of the City's active sources to meet both existing and future demand requirements, based on existing pumping capacities of the individual supply facilities, is presented in **Table 7-2**. The demands used in the evaluation for 2013 and 2027 are future demand projections without reductions from water use efficiency efforts, as shown in **Table 4-12** of **Chapter 4**. Therefore, if additional reductions in water use are achieved through water use efficiency efforts, the total source capacity required in the future will be less than that shown in the table.

Table 7-2
Water Source Capacity Evaluation

Description	Existing	Future Projections	
	2007	2013	2027
Required Source Capacity (gpm)			
Peak Day Demand	1,663	1,974	2,715
Available Source Capacity (gpm)			
Bryant Well No. 1	1,350	1,350	1,350
Bryant Well No. 2	0	0	650
Cedarhome Well	500	600	600
Fure Well	100	100	100
Hatt Slough Springs	350	350	350
Totals	2,300	2,400	3,050
Surplus or Deficient Source Capacity (gpm)			
Surplus or Deficient Amt.	637	426	335

The results of the analysis indicate that the City has approximately 637 gallons per minute (gpm) of surplus source capacity to meet existing demands. Without improvements, the City's existing sources are sufficient to meet the projected demands of the system until approximately 2020, when the peak day demand of the system approaches the combined capacity of the existing sources, as shown in **Chart 7-1**. The City is coordinating with the Department of Ecology (Ecology) to transfer the remaining water right from the Sill Well to the Cedarhome Well and plans to replace Bryant Well No. 2 prior to 2020 to ensure sufficient source capacity is available throughout the 20-year planning period. These improvements are described further in **Chapter 9**.

Additional source capacity should continue to be pursued to provide sufficient backup supply in the event that one of the existing sources is out of service for maintenance or an emergency event. If Bryant Well No. 1 was out of service, the City could not supply peak day demands to water system customers. The City plans to evaluate improvements to increase production at Hatt Slough Springs to provide more redundancy in the supply sources.

Chart 7-1
Future Water Supply and Demand Projections

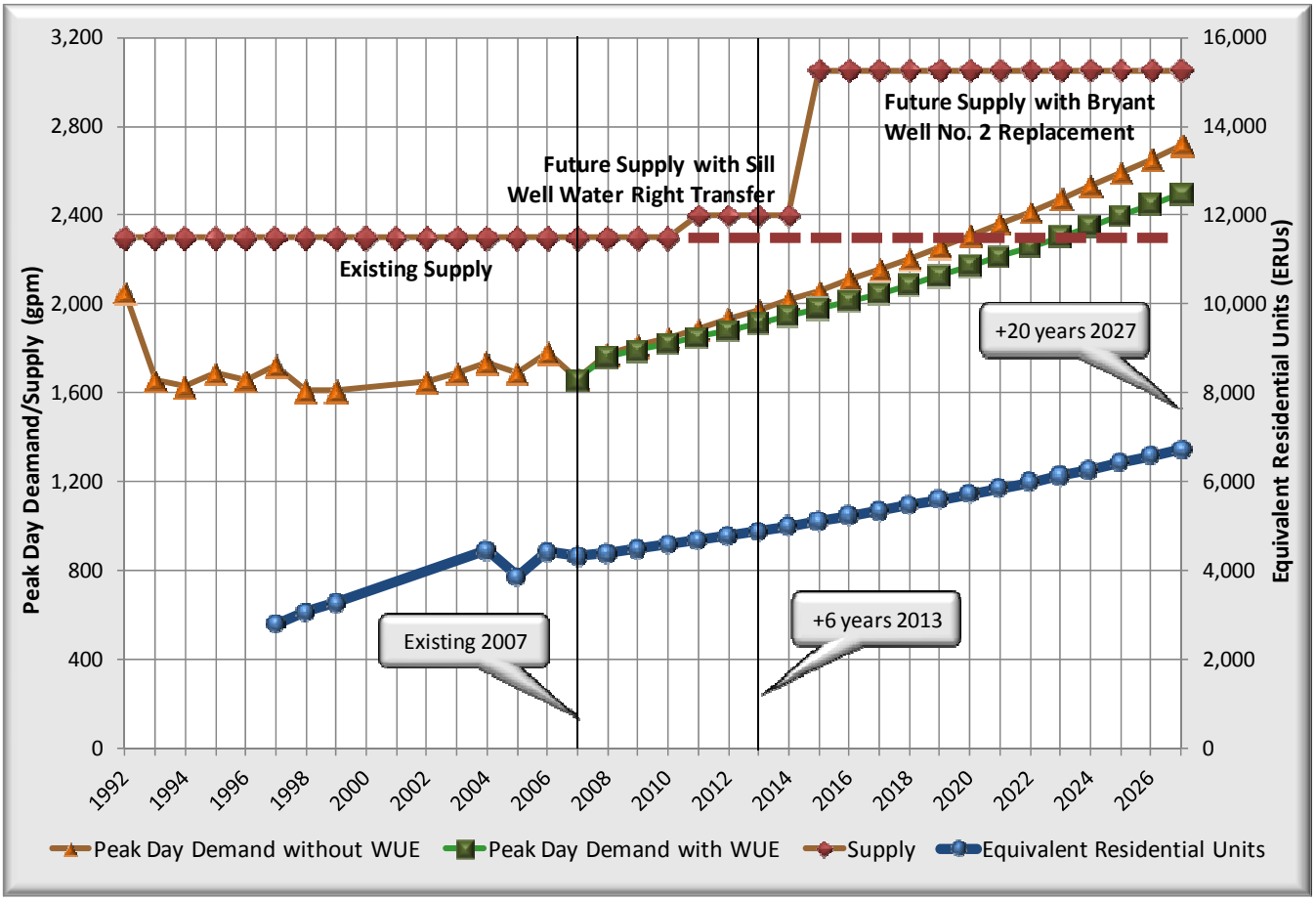

WATER SUPPLY FACILITIES EVALUATION

This section evaluates the existing supply facilities to determine if they have sufficient capacity to provide water supply at a rate that meets the existing and future demands of the one or more zones that they supply. This section also identifies facility deficiencies that are not related to the capacity of the supply facilities.

Analysis Criteria

The evaluation to determine if supply facilities have adequate capacity is based on one of two criteria, as follows: 1) if the pressure zone that the facility provides supply into has water storage, then the amount of supply required is equal to the peak day demand of the zone; or 2) if the pressure zone that the facility provides supply into does not have water storage, then the amount of supply required is equal to the peak hour demand of the zone. The higher supply requirement of the latter criteria is due to the lack of equalizing storage that is typically utilized to provide short-term supply during times of peak system demands.

Supply Analysis Results

297 Zone Facilities

The Bryant Wells, Cedarhome Well and Fure Well provide water supply directly to the 297 Zone. These supply facilities also indirectly serve the 365 Zone through the Knittle and Cedarhome Booster Pump Stations, and the 242, 252, 255 and 265 Zones through pressure reducing stations. When demand in the 125 Zone exceeds the supply capacity of the Hatt Slough Springs, pressure reducing stations also transfer water from the 297 Zone to the 125 Zone. **Table 7-3** summarizes the current and future supply requirements of the 297 Zone based on existing and projected water demands for the system. **Table 7-3** also summarizes the amount of water supply available to the 297 Zone. The results of the analyses indicate that the existing and proposed configurations and capacities of the 297 Zone facilities are sufficient to meet both existing and future demands.

Table 7-3
297 Zone Supply Evaluation

Description	Existing	Future Projections	
	2007	2013	2027
Required Supply (gpm)			
297/Other Zone Peak Day Demand	902	1,067	1,536
Transfer to 125 & 200 Zones	315	372	446
Transfer to 365 Zone	95	186	384
Total Required Supply	1,217	1,438	1,981
Available Supply (gpm)			
Bryant Well No. 1	1,350	1,350	1,350
Bryant Well No. 2	0	0	650
Cedarhome Well	500	600	600
Fure Well	100	100	100
Total Available Supply	1,950	2,050	2,700
Surplus or Deficient Supply (gpm)			
Surplus or Deficient Amt.	733	612	719

125 Zone Facilities

Water supply to the 125 Zone is provided by the Hatt Slough Springs and pressure reducing valve (PRV) stations that transfer water from the 297 Zone. **Table 7-4** summarizes the current and future supply requirements of the 125 Zone based on existing and projected water demands for the 125 Zone and the future 200 Zone, which is currently part of the 125 Zone. **Table 7-4** also summarizes the current amount of water supply available to the 125 Zone based on the capacity of the Hatt Slough Springs and the supply amount required for transfer from the 297 Zone through PRV stations. The supply amount required for transfer from PRV stations is the total required

supply that exceeds the capacity of Hatt Slough Springs and is also shown in **Table 7-3**. The existing capacity of the PRV stations supplying the 125 Zone is approximately 1,958 gpm. The results of the analysis indicate that the existing and proposed configurations are sufficient to meet both the existing and future demands of the 125 Zone.

Table 7-4
125 Zone Supply Evaluation

Description	Existing 2007	Future Projections 2013	Future Projections 2027
Required Supply (gpm)			
125 & 200 Zone Peak Day Demand	665	722	796
Total Required Supply	665	722	796
Available Supply (gpm)			
Hatt Slough Springs	350	350	350
Transfer from PRV Stations	315	372	446
Total Available Supply	665	722	796
Surplus or Deficient Supply (gpm)			
Surplus or Deficient Amt.	0	0	0

365 Zone Facilities

The Cedarhome and Knittle Booster Pump Stations supply water to the 365 Zone, which is currently a closed zone (i.e., does not have water storage). **Table 7-5** summarizes the existing water supply evaluation based on supply requirements and current pumping rates. The existing required supply is based on the peak hour demand in the 365 Zone plus the maximum fire flow requirement of the zone. The supply available for transfer from the 297 Zone to the 365 Zone through the booster pump stations includes the 365 Zone peak day demand of 95 gpm that is shown in **Table 7-3**. The remaining supply transferred to the 365 Zone may be provided by a combination of the supply surplus from the 297 Zone shown in **Table 7-3** and fire flow storage in the Knittle Reservoirs. The Cedarhome and Knittle Booster Pump Stations have a combined capacity of 2,360 gpm.

Table 7-6 presents a similar analysis of the 365 Zone supply facilities, but is based on the completion of the Cedarhome Reservoir, which is expected in fall 2009. With the new reservoir providing equalizing and fire flow storage to the zone, the 365 Zone supply facilities will only be required to provide supply capacity equivalent to the peak day demand. The results of the analyses indicate that the proposed configuration of the 365 Zone with the new Cedarhome Reservoir will have sufficient capacity to meet both existing and future demands.

Table 7-5
Existing 365 Zone Supply Evaluation

Description	Existing 2007
Required Supply (gpm)	
365 Zone Peak Hour Demand	123
365 Zone Max. Fire Flow Demand	1,000
Total Required Supply	1,123
Available Supply (gpm)	
365 Zone PDD Transfer from 297 Zone from Cedarhome/Knittle BPS	95
Supply Surplus from 297 Zone Available for Transfer from Cedarhome/Knittle BPS	733
Fire Flow Storage from 297 Zone Available for Transfer from Cedarhome/Knittle BPS	295
Total Available Supply	1,123
Surplus or Deficient Supply (gpm)	
Surplus or Deficient Amt.	0

Table 7-6
365 Zone Supply Evaluation with Cedarhome Reservoir

Description	Existing 2007	Future Projections 2013	Future Projections 2027
Required Supply (gpm)			
365 Zone Peak Day Demand	95	186	384
Total Required Supply	95	186	384
Available Supply (gpm)			
365 Zone PDD Transfer from 297 Zone from Cedarhome/Knittle BPS	95	186	384
Total Available Supply	95	186	384
Surplus or Deficient Supply (gpm)			
Surplus or Deficient Amt.	0	0	0

Facility Deficiencies

Bryant Well No. 1 is the older well at the Bryant Well site, but has not had a decrease in production like Bryant Well No. 2. The capacity of Bryant Well No. 2 was approximately 1,000 gpm until 1998, when it decreased to approximately 600 gpm. The capacity of the well has recently declined to 200 gpm and is not currently used. The City intends to replace Bryant Well No. 2 to fully utilize the 2,000 gpm water right that is shared by both wells. The Bryant Well Field Treatment Facility will reduce the level of manganese that currently exists in the raw water produced from the well. The treatment facility will also provide disinfection, which had not previously been provided for Bryant Well No. 2. This improvement is discussed further in **Chapter 9**.

Hatt Slough Springs is approximately 75 years old and is in need of building and pump improvements. The spring collection system was modified in 1984 but does not currently produce the full supply amount that is available under the source's water right. A sanitary survey conducted by Department of Health (DOH) indicated concern that the collection boxes are not watertight, which may make the springs susceptible to contaminants from surface water flow entering the collection boxes. Proposed improvements to resolve these deficiencies are identified in **Chapter 9**.

The Cedarhome Well produces sand that may clog water treatment equipment, increase maintenance time and create excessive wear on pumping equipment over time. In 2008, Ecology approved the transfer of a majority of the Sill Well water rights to the Cedarhome Well. To transfer the remaining 100 gpm, the City must complete pump tests to demonstrate that additional withdrawal at this location will not result in an increased risk for seawater intrusion. Proposed improvements to resolve these deficiencies are identified in **Chapter 9**.

The Fure Well, like the Bryant Wells, also produces water with high manganese levels and is housed in an old building that is in need of replacement. However, since the well only pumps at a rate of 100 gpm, the well will likely be used as a backup supply in the future.

STORAGE FACILITIES

This section evaluates the City's existing water storage tanks to determine if they have sufficient capacity to meet the existing and future storage requirements of the system. This section also identifies facility deficiencies that are not related to the capacity of the water tanks.

Analysis Criteria

Water storage is typically made up of the following components: operational storage, equalizing storage, standby storage, fire flow storage, and dead storage. Each storage component serves a different purpose and will vary from system to system. A definition of each storage component and the criteria used to evaluate the capacity of the City's storage tanks is provided below.

Operational Storage - Volume of the reservoir used to supply the water system under normal conditions when the source or sources of supply are not delivering water to the system (i.e., sources are in the off mode). Operational storage is essentially the average amount of drawdown in the reservoir during normal operating conditions, which represents a volume of storage that will most likely not be available for equalizing storage, fire flow storage or standby storage. The operational storage in the Knittle Reservoirs and future Cedarhome Reservoir is the amount of storage between the fill, or pump starting setpoint level, and the overflow elevation of the tank. The operational

storage in the Bailey Reservoirs is the amount of storage between the average level of the reservoir and the overflow elevation.

Equalizing Storage - Volume of the reservoir used to supply the water system under peak demand conditions when the system demand exceeds the total rate of supply of the sources. DOH requires that equalizing storage be stored above an elevation that will provide a minimum pressure of 30 psi at all service connections throughout the system under peak hour demand conditions. Because the City's supply sources primarily operate on a "call on demand" basis to fill the reservoirs, the equalizing storage requirements are determined using the standard DOH formula that considers the difference between the system peak hour demand and the combined capacity of the supply sources.

$$\mathbf{ES = (PHD - Q_S)(150\ minutes)}\text{, but in no case less than zero}$$

Where:

ES = Equalizing Storage, in gallons.

PHD = Peak Hour Demand, in gpm.

Q_S = Sum of all installed and active sources, except emergency supply, in gpm.

The capacity of the sources that supply the 297 and 365 Zones are sufficient to meet the peak hour demands of these operating areas. Therefore, the equalizing storage requirement for these pressure zones is zero. The 125 Zone is supplied by the Hatt Slough Springs and PRVs that transfer water from the 297 Zone. For the purposes of the equalizing storage analyses, only the supply capacity of the spring was considered in the calculation. The equalizing storage analyses also considered the supply capacity available to the system as a whole to ensure that the zones that transfer storage through PRVs or booster pump stations have sufficient supply capacity to do so.

Standby Storage - Volume of the reservoir used to supply the water system under emergency conditions when supply facilities are out of service due to equipment failures, power outages, loss of supply, transmission main breaks and any other situation that disrupts the supply source. DOH requires that standby storage be stored above an elevation that will provide a minimum pressure of 20 psi at all service connections throughout the system. The criteria for determining the standby storage requirements for the City's system, which has multiple supply sources, is based on the standard DOH formula that requires average day demand and supply source capacity data. The amount required is sufficient to supply the system for a 48-hour period when the primary supply facility is out of service and the system is experiencing average day demands.

$$\mathbf{SB = (2\ days)[(ADD)(N) - t_m\ (Q_S\text{-}Q_L)]}$$

Where:

SB = Standby Storage, in gallons.

ADD = Average Day Demand per ERU, in gpd/ERU.

N = Number of ERUs.

Q_S = Sum of all installed and continuously available sources, except emergency supply, in gpm.

Q_L = The capacity of the largest source available to the system, in gpm.

t_m= Time the remaining sources are pumped on the day when the largest source is not available, in minutes. Unless otherwise restricted, this value is 1,440 minutes.

The standby storage analysis was completed for each reservoir operating area. For the 297 Zone, the largest capacity source that was assumed to be out of service was Bryant Well No. 1. For the 365 Zone analysis, the Knittle Booster Pump Station was assumed to be out of service and the PRVs supplying the 125 Zone were assumed to be out of service for the 125 Zone standby storage analysis. The standby storage analyses also considered the supply capacity available to the system as a whole with the largest source, Bryant Well No. 1, out of service to ensure that the zones that transfer storage through PRVs or booster pump stations have sufficient supply capacity to do so.

DOH recommends that the minimum standby storage volume be no less than 200 gallons per ERU. In most cases, this calculation determined the standby storage volume required for the City's reservoir operating areas.

Fire Flow Storage - Volume of the reservoir used to supply water to the system at the maximum rate and duration required to extinguish a fire at the building with the highest fire flow requirement. The magnitude of the fire flow storage is the product of the fire flow rate and duration of the system's maximum fire flow requirement established by the local fire authority, the City of Stanwood Fire Department. DOH requires that fire flow storage be stored above an elevation that will provide a minimum pressure of 20 psi at all points throughout the distribution system under peak day demand conditions. The fire flow storage requirements shown in the analyses that follow are based on a maximum planning level fire flow requirement in the 297 Zone of 3,500 gpm for a 3-hour duration. The future Cedarhome Reservoir will provide fire flow storage of 1,000 gpm for a 2-hour duration, which is the 365 Zone's largest planning level fire flow requirement. This storage amount will be used to supplement fire flow storage in the 297 Zone through PRVs; similarly, fire flow storage in the Knittle Reservoirs will provide fire flow to the 125 Zone and all other lower pressure zones.

Dead Storage - Volume of the reservoir that cannot be used because it is stored at an elevation that does not provide system pressures that meet the minimum pressure requirements established by DOH without pumping. This unusable storage occupies the lower portion of most ground level reservoirs. Water that is stored below an elevation that cannot provide a minimum pressure of 20 psi is considered dead storage for the analyses that follow.

Storage Analysis Results

The storage analyses are based on an evaluation of the existing storage facilities providing water to three supply areas; the 125 Zone, the 365 Zone, and the combined areas of the 297 Zone and all other zones.

Existing Storage Analysis

As shown in **Table 7-7**, the maximum combined storage capacity of the City's reservoirs is 1.6 million gallons (MG). However, the total amount of usable storage for operational, equalizing, standby and fire flow purposes is reduced by more than half due to the significant amount of dead storage (i.e., non-usable storage) in the lower portion of the reservoirs in the 297 Zone. The dead storage is due to water services in the 297 Zone that are located at the higher elevations near the

Knittle Reservoirs. Dead storage caused by the normally low pressures in this area are the result of being served by a pressure zone that is not suited to provide adequate pressures at these higher elevations. For example, the services in the higher elevations of the 297 Zone should be served by the 365 Zone. The dead storage will be converted to usable storage in the future, upon completion of the proposed pressure zone improvements that described in **Chapter 9**.

Table 7-7
Existing Storage Evaluation

Description	Supply Area			Totals
	125 Zone	297 & All Other Zones	365 Zone	
Available/Usable Storage (MG)				
Maximum Storage Capacity	0.40	1.20	0.00	1.60
Dead (Non-usable Storage)	0.00	-0.86	0.00	-0.86
Total Available Storage	0.40	0.34	0.00	0.74
Required Storage (MG)				
Operational Storage	0.14	0.13	0.08	0.36
Equalizing Storage	0.08	0.00	0.00	0.08
Standby Storage	0.35	0.47	0.05	0.87
Fire Flow Storage	0.00	0.51	0.12	0.63
Totals	0.57	1.11	0.25	1.93
Surplus or Deficient Storage (MG)				
Surplus or Deficient Amt.	-0.17	-0.77	-0.25	-1.19

The results of the existing storage evaluation, as shown in **Table 7-7**, indicate that the system has a storage deficiency of approximately 1.19 MG, most of which is in the 297 Zone. This is primarily due to the significant amount of dead storage that cannot be utilized.

The City is currently constructing the Cedarhome Reservoir, which will serve the 365 Zone once completed in the fall of 2009. The storage analysis presented in **Table 7-8** is based on the existing system with the new Cedarhome Reservoir online. The results of this analysis indicate that the system will have a storage deficiency of approximately 0.64 MG with the addition of this facility.

Table 7-8
Existing Storage Evaluation with Cedarhome Reservoir

Description	Supply Area			Totals
	125 Zone	297 & All Other Zones	365 Zone	
Available/Usable Storage (MG)				
Maximum Storage Capacity	0.40	1.20	0.55	2.15
Dead (Non-usable Storage)	0.00	-0.86	0.00	-0.86
Total Available Storage	0.40	0.34	0.55	1.29
Required Storage (MG)				
Operational Storage	0.14	0.13	0.08	0.36
Equalizing Storage	0.08	0.00	0.00	0.08
Standby Storage	0.35	0.47	0.05	0.87
Fire Flow Storage	0.00	0.51	0.12	0.63
Totals	0.57	1.11	0.25	1.93
Surplus or Deficient Storage (MG)				
Surplus or Deficient Amt.	-0.17	-0.77	0.30	-0.64

Future Storage Analysis

The system's future storage requirements were computed for the 6 and 20-year planning periods, based on year 2013 and 2027 demand projections. The analyses were performed to determine the adequacy of the City's storage facilities to meet future storage requirements for each storage supply area. The year 2013 analyses are based on the Cedarhome Reservoir being online, the transfer of the remaining 100 gpm of the Sill Well water right to the Cedarhome Well and the completion of the proposed pressure zone improvements that will eliminate the dead storage in the system. The year 2027 analyses are based on the replacement of the Bryant Well No. 2. These improvements are discussed in more detail in **Chapter 9**.

Table 7-9
Future Storage Projections

Description	2013 Supply Area[1]				2027 Supply Area[1]			
	125 Zone	297 & All Other Zones	365 Zone	Totals	125 & 200 Zones	297 & All Other Zones	365 Zone	Totals
Available/Usable Storage (MG)								
Maximum Storage Capacity	0.40	1.20	0.55	2.15	0.40	1.20	0.55	2.15
Dead (Non-usable Storage)	0.00	0.00	0.00	0.00	0.00	0.00	0.00	0.00
Total Available Storage	0.40	1.20	0.55	2.15	0.40	1.20	0.55	2.15
Required Storage (MG)								
Operational Storage	0.14	0.13	0.08	0.36	0.14	0.13	0.08	0.36
Equalizing Storage	0.09	0.00	0.00	0.09	0.10	0.00	0.00	0.10
Standby Storage	0.36	0.53	0.09	0.98	0.41	0.76	0.19	1.36
Fire Flow Storage	0.00	0.51	0.12	0.63	0.00	0.51	0.12	0.63
Totals	0.59	1.17	0.30	2.05	0.65	1.40	0.39	2.45
Surplus or Deficient Storage (MG)								
Surplus or Deficient Amt.	-0.19	0.03	0.25	0.10	-0.25	-0.20	0.16	-0.30

1 = Assumes pressure zone improvements to eliminate dead storage are completed by 2013, Bryant Well No. 2 is replaced by 2027 and remaining Sill Well water right is transferred to Cedarhome Well.

As shown in **Table 7-9**, the improvements planned to be completed prior to 2013 will resolve the storage deficiency in the system. However, approximately 0.3 MG of additional storage will be required by the year 2027 to meet the needs of the system through the 20-year planning period. Site acquisition and the design and construction of a new reservoir has been identified in **Chapter 9** to provide the additional storage needs of the system.

Facility Deficiencies

The City's existing reservoirs are relatively new and do not have any noticeable deficiencies. The City's Bailey Reservoirs, which were built in 1989, are the oldest tanks in the system. All tanks were designed to withstand seismic events.

The only steel tank, Knittle Reservoir No. 2, was built in 1997. Although the paint coating is currently in excellent condition, a qualified coating inspector will be retained to inspect the integrity of the coating on a five-year time schedule, or more frequently, if visible signs of coating deterioration appear.

DISTRIBUTION AND TRANSMISSION SYSTEM

This section evaluates the City's existing distribution and transmission system (i.e., water mains) to determine if they are adequately sized and looped to provide the necessary flow rates and pressures to meet the existing and future requirements of the system. This section also identifies deficiencies that are not related to the capacity of the water mains.

Analysis Criteria

Distribution and transmission mains must be capable of adequately and reliably conveying water throughout the system at acceptable flow rates and pressures. The criteria used to evaluate the City's distribution and transmission system is the state mandated requirements for Group A water systems contained in WAC 246-290-230, Distribution Systems. The pressure analysis criteria states that the distribution system "…shall be designed with the capacity to deliver the design peak hour demand quantity of water at 30 psi under peak hour demand flow conditions measured at all existing and proposed service water meters." It also states that if fire flow is to be provided, "… the distribution system shall also provide maximum day demand (MDD) plus the required fire flow at a pressure of at least 20 psi at all points throughout the distribution system."

Hydraulic analyses of the existing system were performed under existing peak hour demand (PHD) conditions to evaluate its current pressure capabilities and identify existing system deficiencies. The existing system was also analyzed under existing peak day demand (PDD) conditions to evaluate the current fire flow capabilities and identify additional existing system deficiencies. Additional hydraulic analyses were then performed with the same hydraulic model under future PDD conditions and with the proposed improvements to demonstrate that the identified improvements will eliminate the deficiencies and meet the requirements far into the future. The following is a description of the hydraulic model, the operational conditions and facility settings used in the analyses.

Hydraulic Model

Description

A computer-based hydraulic model of the existing water system was updated using version 8 of the WaterGEMS® program, developed by Bentley Systems, Inc. All water mains in the City's water system, including dead-end mains, were included in the model and based on AutoCAD® water system maps and as-built records provided by the City. The junction node elevation data was extracted from a digital elevation model file that was obtained from the United States Geological Survey (USGS). A hydraulic model node diagram, providing a graphical representation of the model of the water system, is contained in **Appendix M**.

Demand Data

The hydraulic model of the existing system contains 2007 average day demand data. Supply data from the 2007 average day demand was distributed throughout the junction nodes of the model based on allocation levels that reflect the proportionate share of total supply to each of the City's meter routes. Demands for the City's largest water users were entered separately into the model at

their appropriate service locations. The peaking factors shown in **Chapter 4** were used to analyze the system under PHD and PDD conditions.

The hydraulic model of the proposed system contains 6-year demand levels that are projected for the year 2013 and 20-year demand levels that are projected for the year 2027. The future demand distribution is based on input from the City and a land capacity analysis that evaluated vacant and redevelopable parcels identified by the City. The City and Snohomish County's zoning designations were used in the evaluation to identify the total available land capacity in terms of ERUs for these parcels and to subsequently estimate future demand levels in the water system. Twin City Foods and Schenk Packing anticipate lower water needs in the future, however, to be conservative, their existing demand levels were assumed to remain the same.

Facilities

The hydraulic model of the existing system contained all active existing system facilities. For the proposed system analyses in the year 2013 and 2027, the hydraulic model contained all active existing system facilities and proposed system improvements identified in **Chapter 9** for the 6-year and 20-year planning period, respectively.

The facility settings for the pressure analyses corresponded to a peak hour demand event in the water system. All sources of supply that are currently available to the system, or will be available in the future for the year 2013 and 2027 analyses, during a peak period were operating at their normal summertime pumping rates. The reservoir levels were modeled to reflect full utilization of operational and equalizing storage. The operational conditions for the pressure analyses are summarized in **Table 7-10**.

Table 7-10
Hydraulic Analyses Operational Conditions

Description	PHD Pressure Analysis			Fire Flow Analysis		
	2007	2013	2027	2007	2013	2027
Demand	2007 PHD	2013 PHD	2027 PHD	2007 PDD	2013 PDD	2027 PDD
Bailey Reservoirs HGL (ft)	115.8	115.4	114.8	113.3	112.8	112.2
Knittle Reservoirs HGL (ft)	292.0	292.0	292.0	272.3	272.3	272.3
Cedarhome Reservoir HGL (ft)	---	361.0	361.0	---	353.8	353.8
Knittle BPS	OFF	OFF	OFF	OFF	OFF	OFF
Cedarhome BPS	ON	OFF	OFF	ON	OFF	OFF
Bryant Well No. 1	ON	ON	ON	ON	ON	ON
Bryant Well No. 2	OFF	OFF	ON	OFF	OFF	ON
Cedarhome Well	ON	ON	ON	ON	ON	ON
Fure Well	OFF	OFF	OFF	OFF	OFF	OFF
Hatt Slough Springs	ON	ON	ON	ON	ON	ON

Separate fire flow analyses were performed on the system to size distribution system improvements and calculate fire flow availability. The hydraulic model for the fire flow analyses contained settings that correspond to PDD events. All sources of supply that are currently available to the system during a peak period were operating at their normal pumping rates, and the reservoir levels were modeled to reflect full utilization of operational, equalizing and fire flow storage based on the maximum planning level fire flow requirement. **Table 7-10** summarizes the operational conditions for the fire flow analyses for the existing, year 2013 and year 2027 systems.

Calibration

Hydraulic model calibration is achieved by adjusting the roughness coefficients of the water mains in the model so the resulting pressures and flows from the hydraulic analyses closely match the pressures and flows from actual field tests under similar demand and operating conditions. Initial Darcy-Weisbach roughness coefficients were entered in the model based on computed estimates of the coefficients from available pipe age and material data. For example, older water mains were assigned higher roughness coefficients than new water mains; thereby assuming that the internal surface of water pipe becomes rougher as it gets older. Additional calibration of the model was achieved using field flow and pressure data that were collected throughout the system for this purpose. The average accuracy of the calibrated model was approximately 97 percent of the actual field data collected, with 90 percent of the individual analysis locations predicting the field results to an accuracy of 95 percent.

Hydraulic Analysis Results

Several hydraulic analyses were performed to determine the capability of the system to meet the pressure and flow requirements identified in **Chapter 5** and contained in WAC 246-290-230. The first analysis was performed to determine the pressures throughout the system under existing (i.e., 2007) peak hour demand conditions. The results of this analysis were used to identify locations of low and high pressures. To satisfy the minimum pressure requirements, the pressure at all water service locations must be at least 30 psi during PHD conditions. In addition, the system should not have widespread areas with high pressures, generally considered to be more than 100 psi. A summary of the pressure deficiencies identified from the results of this analysis is contained in **Table 7-11**.

Table 7-11
Pressure Analysis Summary

Description	Approx. Location	Existing Pressure Zone	Proposed Pressure Zone	Node Number	Pressure (psi)		
					Existing System	Future 2013	Future 2027
Low Pressure Areas							
Single Family Area	North End of Old Pacific Hwy	125	200	J-349	14	52	52
Commercial Area	East of Northstar Cold Storage	125	245	J-436	25	82	86
Single Family Area	279th Pl NW	297	365	J-707	25	73	73
Single Family Area	East of 80th Ave NW (~282nd)	297	365	J-578	30	59	59
High Pressure Areas							
Single Family Area	Pioneer Hwy and ~70th Ave NW	297	297	J-50	106	105	104
Single Family Area	Pioneer Hwy South of SR 532	297	297	J-58	105	104	104

The second set of analyses was performed to determine the capability of the existing water system to provide fire flow throughout the existing water system under PDD conditions. A separate fire flow analysis was performed for each node in the model to determine the available fire flow at a minimum residual pressure of 20 psi in the main adjacent to the hydrant and a maximum allowable water main velocity of 8 feet per second. More than 1,000 fire flow analyses were performed to comprehensively evaluate the water system. For each node analyzed, the resulting fire flow was compared to its general planning level fire flow requirement, which was assigned according to its land use classification. As is typical of most water systems, the City's distribution system was constructed to meet fire flow requirements that were in place at the time of construction. Land use classification changes and/or increases in fire flow requirements over time may create deficiencies. A summary of the results of the analyses for representative system nodes is presented in **Table 7-12**.

Table 4-11 in **Chapter 4** lists the general planning level fire flow requirements for each land use classification. Since the fire flow requirement varies for buildings within each land use classification, the land use based fire flow requirements are only used as a general target for the primary purpose of the system-wide analyses that were performed for this Comprehensive Water System Plan (WSP). Additional improvements may be needed in areas where actual fire flow requirements exceed the planning level targets and shall be the responsibility of the developer. The results of the fire flow analyses were used to identify undersized water mains and proposed water main improvements. A summary of the fire flow deficiencies is contained near the end of this section.

Table 7-12
Fire Flow Analysis Summary

Description	Approx. Location	Existing Pressure Zone	Node Number	Available Fire Flow (gpm) Existing System	Future 2013	Future 2027	Target Fire Flow (gpm)
Stanwood Primary School	10227 273rd Pl. NW	125	J-125	1,320	2,455	6,469	3,500
Main Street Business	Main Street	125	J-133	704	704	6,589	3,000
Northstar Cold Storage	27110 Pioneer Hwy	125	J-436	692	2,302	4,184	3,500
Stanwood Medical Center	9631 269th St. NW	125	J-513	1,250	1,249	6,599	3,000
Twin City Foods	10120 269th Pl. NW	125	J-623	1,322	2,966	4,721	3,000
Viking Village	8820 Viking Way	125	J-641	1,285	1,306	5,064	3,000
Thrifty Foods	271st St. NW & 88th	125	J-643	1,100	1,096	6,611	3,000
Stanwood Middle School	9405 271st St. NW	125	J-800	1,301	2,893	3,953	3,500
Josephine Sunset Home	9901 272nd Pl. NW	125	J-989	1,320	1,892	5,207	2,500
Single Family Area	Hennings Estates	265	J-238	868	864	1,333	1,000
Multi-Family Area	Island View Drive	265	J-240	696	695	2,735	2,500
Single Family Area	Copper Station	297	J-1016	1,343	1,961	4,324	1,000
Cedarhome Elem. School	27911 68th Ave. NW	297	J-1092	1,750	1,849	4,140	3,500
Stanwood High School	7400 272nd St. NW	297	J-287	2,069	2,081	5,450	3,500
Schenk Packing	8204 288th St. NW	297	J-370	1,044	980	3,502	3,500
Single Family Area	Candle Ridge	297	J-458	1,142	2,539	3,077	1,000
Single Family Area	Church Creek Estates	297	J-477	1,065	1,065	1,881	1,750
Single Family Area	Fox Hill Estates	297	J-497	1,250	1,250	1,248	1,000
Port Susan Middle School	7506 267th St. NW	297	J-519	1,215	1,208	5,020	3,500
Maple Court Apartments	26031 72nd Ave. NW	297	J-62	2,230	2,518	3,511	2,500
Twin City Elementary	26211 72nd Ave. NW	297	J-73	2,226	2,304	3,770	3,000
Stanwood Camano Village	26603 72nd Ave. NW	297	J-93	2,001	2,002	4,278	3,000
Single Family Area	Eagle Heights	365	J-1055	1,677	956	2,094	1,000
Single Family Area	Bay View Lane	365	J-440	1,553	1,819	2,181	1,000
Single Family Area	Cedarhome Farms	365	J-850	1,842	1,026	6,344	1,000

Once all deficiencies were identified, proposed water main improvements were included in the model, and pressure and fire flow analyses were performed throughout the system to demonstrate that the improvements will eliminate the deficiencies and meet the flow and pressure requirements. These analyses were modeled under projected year 2013 and 2027 peak day demand conditions to ensure that the improvements are sized sufficiently to meet the future systems' needs. A summary of the results of these analyses is shown in **Tables 7-11** and **7-12** for the same areas that were summarized from the existing water system analyses. The results of the analyses indicate that all areas that do not currently meet the DOH minimum pressure requirement of 30 psi will meet this requirement once the improvements scheduled within the 6-year planning period as shown in **Chapter 9** are completed. The results of the fire flow analyses indicate that all fire flow deficiencies are resolved by 2027 with the proposed improvements. A description of these improvements and a

figure showing their locations are presented in **Chapter 9**. A description of the deficiencies identified from the hydraulic analyses is presented in the following section.

Deficiencies

This section presents a summary of the distribution and transmission system deficiencies that were identified from the hydraulic analyses results of the existing water system and also includes deficiencies not related to the capacity of the mains. These deficiencies will be eliminated upon completion of the proposed improvements that are presented in **Chapter 9**.

Pressure Deficiencies

The following areas have pressures that are either lower or higher than the acceptable pressure levels.

- Low pressures in the 125 Zone at the north end of Old Pacific Highway.
- Low pressures in the 125 Zone near the Bailey Reservoirs and Northstar Cold Storage.
- Low pressures in the 297 Zone west of 80th Avenue NW at approximately 282nd Street NW.
- Low pressures in the 297 Zone west of the Knittle Reservoirs.
- Low pressures in the 242 Zone dead end main on Olympic View Place.
- High pressures in the 297 Zone in a dead end main off of Pioneer Highway, east of 72nd Avenue NW.
- High pressures in the 297 Zone along Pioneer Highway south of State Route (SR) 532.

Fire Flow Deficiencies

The following areas have low fire flows that do not meet the actual or target fire flow levels.

- Low fire flows and high velocities in the commercial areas of downtown Stanwood west of Pioneer Highway, primarily due to the undersized 6 and 8-inch water mains in the area.
- Low fire flows and high velocities in the Stanwood Middle School area, primarily due to the existing undersized 6 and 8-inch water mains in the area.
- Low fire flows near Twin City Foods, primarily due to flow limitations caused by low residual pressures near the Knittle Reservoirs.
- Low fire flows and high velocities in the Stanwood Elementary School area, primarily due to the existing undersized 6 and 8-inch water mains in the area.
- Low fire flows in the Josephine Sunset Home and adjacent multi-family areas of the 125 Zone, primarily due to the existing undersized 6 and 8-inch water mains in the area.
- Low fire flows and high velocities in the multi-family area near Island View Drive due to the undersized mains serving the area.
- Moderately low fire flows in the residential Hennings Estates area, primarily caused by the old 6-inch asbestos cement pipe.

- Moderately low fire flows and high velocities at Port Susan Middle School, primarily caused by undersized 8-inch mains in 267th Place NW.
- Moderately low fire flows and high velocities in a dead end main near Stanwood Camano Village, primarily due to the undersized water main serving the area.
- Moderately low fire flows and high velocities near Stanwood High School, primarily due to the undersized 8-inch asbestos cement water main in 272nd Street NW.
- Low fire flows and high velocities near Twin City Elementary School, primarily caused by undersized water mains serving the area.
- Moderately low fire flows and high velocities near Cedarhome Elementary School, primarily caused by undersized water mains serving the area.
- Low fire flows and high velocities near Church Creek Estates caused by undersized water mains serving the area.
- Lack of fire flow in several locations without fire hydrants and with small water mains, including the following areas: the 242 Zone; the 252 Zone; areas of the 265 Zone; south of SR 532 in the 125 Zone; Woodland Road; the 365 Zone in the northeast corner of the system; Old Pacific Highway north of 276th Street NW; and near the Stanwood Camano Fairgrounds.

Other Deficiencies

Several areas throughout the system have sufficient fire flow; however, high water velocities are experienced in the system because the water mains are undersized to carry the fire flows at acceptable water velocities. Operating the system with high water velocities can potentially damage the system due to the high pressure surges that commonly occur with high water velocities.

Some areas of the system have water mains that are more than 50 years old, which is beyond the average life expectancy of water mains. Most of the older water mains are located in the downtown area of the City in the 125 Zone. Approximately 23 percent of the City's water main is asbestos cement (AC) water main. Most of the AC pipe is located in the older areas of the City. The City is planning to replace the aging water main in the future, as shown in the schedule of planned improvements in **Chapter 9**. All new water main installations are required to use ductile iron water main in accordance with the City's Water System Standards, a copy of which is included in **Appendix H**.

PRESSURE REDUCING STATIONS

This section evaluates the City's existing pressure reducing stations to identify deficiencies related to their current condition and operation capability.

Evaluation and Deficiencies

The City has a total of 11 pressure reducing stations, all of which are less than 20 years old. Five of the pressure reducing stations transfer water from the 297 Zone to the small pressure reduced zones above Pioneer Highway. The 252 Zone pressure reducing valve (PRV) station (288th and 89th PRV) is functioning properly, but is filled with water and has a tree root growing into the side of the vault. The 255 Zone has two PRV stations (282nd and Nordic Way PRV and 280th and 83rd PRV), and

both are in good condition. The 282nd and Nordic Way PRV is in the best condition. The 280th and 83rd PRV is in need of cleaning due to standing water and worms on the vault bottom. The 265 Zone PRV (276th and 80th) is operational, but is also filled with silt and water.

The PRV station at the intersection of State Route 532 and 530, which is set to transfer water from the 297 Zone to the 125 Zone during a fire flow event in the lower zone, is in good condition. However, the PRV station should have sufficient redundancy to ensure a high level of reliability, since a failure of the PRV would essentially prevent the lower zones from being supplied with fire flow from the storage in the 297 Zone. Proposed improvements for additional pressure reducing stations and general maintenance for the other pressure reducing stations are addressed in **Chapter 9**.

TELEMETRY AND SUPERVISORY CONTROL SYSTEM

This section evaluates the City's existing telemetry and supervisory control system to identify deficiencies related to its condition and current operational capability.

Evaluation and Deficiencies

The City's existing telemetry and supervisory control system, which was installed in 2003, does not have any deficiencies at this time.

SYSTEM CAPACITY

This section evaluates the capacity of the City's existing water system components (supply, storage and transmission) to determine the maximum number of equivalent residential units (ERUs) it can serve. Once determined, system capacity becomes useful in calculating how much capacity is available in the water system to support new customers that apply for water service through the building permit process. The system capacity information, together with the projected growth of the system expressed in ERUs, as shown in **Chart 4-5** of **Chapter 4**, also provides the City with a schedule of when additional system capacity is needed.

Analysis Criteria

The capacity of the City's system was determined from the limiting capacity of the water rights, treatment, supply, transmission and storage facilities. The supply capacity analysis was based on the limiting capacity of the supply facilities and the system's peak day demand per ERU. The treatment capacity analysis was based on the limiting capacity of the treatment systems in the supply facilities and the system's peak day demand per ERU. The transmission capacity analysis was based on the total capacity of the transmission system for the supply sources and the system's peak day demand per ERU.

The storage capacity analysis was based on the storage capacity for equalizing and standby storage and the computed storage requirement per ERU. Operational and fire flow storage capacity were excluded from the storage analysis because these components are not directly determined by water demand or ERUs. For the analyses, a reserve amount equivalent to the existing operational and fire flow storage requirements were deducted from the total available storage capacity to determine the storage capacity available for equalizing and standby storage. This storage capacity available for

equalizing and standby storage was divided by the existing number of ERUs presented in **Chapter 4** to determine the storage requirement per ERU. The ERU-based demand data was derived from the average day demand of the system and demand peaking factors from **Chapter 4**. The annual water rights capacity evaluation was based on the existing annual water rights, as summarized in **Chapter 6**, and the system's average day demand per ERU. The instantaneous water rights capacity evaluation was based on the existing instantaneous water rights, as summarized in **Chapter 6**, and the system's peak day demand per ERU.

Capacity Analysis Results

A summary of the results of the existing system capacity analysis is shown in **Table 7-13**. The analysis includes the new Cedarhome Reservoir, which is scheduled to be completed and online in fall 2009. The results of the existing system capacity analysis indicate that the limiting capacity of the system is storage, which can support up to a maximum of approximately 1,380 ERUs. The existing water system has a deficiency of approximately 2,958 ERUs due to the significant amount of dead storage in the 297 Zone. All other water system components have sufficient capacity to support existing water system customers.

The City plans to install improvements to eliminate the amount of dead storage in the water system and increase the storage capacity of the system. The improvements, which are described further in **Chapter 9,** will convert the area near the Knittle Reservoirs to the 365 Zone from the 297 Zone and are scheduled to begin in 2010. The system capacity analysis shown in **Table 7-14** illustrates the effect of this project on the ERU capacity of the system.

Converting the area of the 297 Zone near the Knittle Reservoirs to the 365 Zone and eliminating the dead storage in the system will increase the storage capacity by nearly 4,000 ERUs to 5,357 ERUs. Following completion of the improvements, storage will still be the limiting component in the system; however, the system will have a surplus capacity of 1,019 ERUs based on 2007 ERUs.

A summary of the results of the six-year projected system capacity analysis is shown in **Table 7-15**. The six-year projected system capacity analysis includes improvements that are planned to be completed within the six-year planning period, as described in **Chapter 9**. These improvements include the completion of the Cedarhome Reservoir, the 297 to 365 Zone conversion and transfer of the remaining Sill Well water rights to the Cedarhome Well. The results of the six-year projected system capacity analysis indicate that the proposed improvements will increase the system capacity to approximately 9,959 ERUs based on the limiting component of the well and spring supply capacity. Thus, the system will have a surplus system capacity of approximately 1,059 ERUs in 2013 if the improvements are completed as planned.

Table 7-13
Existing System Capacity Analysis with Cedarhome Reservoir

Demands Per ERU Basis	
Average Day Demand Per ERU (gal/day)	220
Peak Day Demand Per ERU (gal/day)	552
Peak Hour Demand Per ERU (gal/day)	708
Source Capacity - Well and Spring Supply	
Well and Spring Supply Capacity (gal/day)	3,312,000
Peak Day Demand Per ERU (gal/day)	552
Maximum Supply Capacity (ERU's)	6,000
Source Capacity - Annual Water Rights	
Annual Water Right Capacity (gal/day)	4,721,760
Average Day Demand Per ERU (gal/day)	220
Maximum Annual Water Right Capacity (ERUs)	21,463
Source Capacity - Instantaneous Water Rights	
Instantaneous Water Right Capacity (gal/day)	5,575,680
Peak Day Demand Per ERU (gal/day)	552
Maximum Instantaneous Capacity (ERUs)	10,101
Storage Capacity	
Maximum Equalizing & Standby Storage Capacity (gal)	300,078
Equalizing & Standby Storage Requirement Per ERU (gal)	217
Maximum Storage Capacity (ERU's)	1,380
Transmission Capacity	
Transmission Capacity (gal/day)	6,556,600
Peak Day Demand Per ERU (gal/day)	552
Maximum Transmission Capacity (ERU's)	11,878
Maximum System Capacity	
Based on Limiting Facility - Storage	1,380
Unused Available System Capacity	
Maximum System Capacity (ERU's)	1,380
Existing (2007) ERU's	4,339
Deficient Capacity (ERU's)	-2,958

Table 7-14
System Capacity Analysis with 297 Zone Conversion to 365 Zone

Demands Per ERU Basis	
Average Day Demand Per ERU (gal/day)	220
Peak Day Demand Per ERU (gal/day)	552
Peak Hour Demand Per ERU (gal/day)	708
Source Capacity - Well and Spring Supply	
Well and Spring Supply Capacity (gal/day)	3,312,000
Peak Day Demand Per ERU (gal/day)	552
Maximum Supply Capacity (ERU's)	6,000
Source Capacity - Annual Water Rights	
Annual Water Right Capacity (gal/day)	4,721,760
Average Day Demand Per ERU (gal/day)	220
Maximum Annual Water Right Capacity (ERUs)	21,463
Source Capacity - Instantaneous Water Rights	
Instantaneous Water Right Capacity (gal/day)	5,575,680
Peak Day Demand Per ERU (gal/day)	552
Maximum Instantaneous Capacity (ERUs)	10,101
Storage Capacity	
Maximum Equalizing & Standby Storage Capacity (gal)	1,164,648
Equalizing & Standby Storage Requirement Per ERU (gal)	217
Maximum Storage Capacity (ERU's)	5,357
Transmission Capacity	
Transmission Capacity (gal/day)	6,556,600
Peak Day Demand Per ERU (gal/day)	552
Maximum Transmission Capacity (ERU's)	11,878
Maximum System Capacity	
Based on Limiting Facility - Storage	5,357
Unused Available System Capacity	
Maximum System Capacity (ERU's)	5,357
Existing (2007) ERU's	4,339
Deficient Capacity (ERU's)	1,019

Table 7-15
Year 2013 System Capacity Analysis with Proposed Improvements

Demands Per ERU Basis	
Average Day Demand Per ERU (gal/day)	231
Peak Day Demand Per ERU (gal/day)	580
Peak Hour Demand Per ERU (gal/day)	744
Source Capacity - Well and Spring Supply	
Well and Spring Supply Capacity (gal/day)	3,456,000
Peak Day Demand Per ERU (gal/day)	580
Maximum Supply Capacity (ERU's)	5,959
Source Capacity - Annual Water Rights	
Annual Water Right Capacity (gal/day)	4,721,760
Average Day Demand Per ERU (gal/day)	231
Maximum Annual Water Right Capacity (ERUs)	20,441
Source Capacity - Instantaneous Water Rights	
Instantaneous Water Right Capacity (gal/day)	5,575,680
Peak Day Demand Per ERU (gal/day)	580
Maximum Instantaneous Capacity (ERUs)	9,613
Storage Capacity	
Maximum Equalizing & Standby Storage Capacity (gal)	1,164,648
Equalizing & Standby Storage Requirement Per ERU (gal)	193
Maximum Storage Capacity (ERU's)	6,050
Transmission Capacity	
Transmission Capacity (gal/day)	6,556,600
Peak Day Demand Per ERU (gal/day)	580
Maximum Transmission Capacity (ERU's)	11,304
Maximum System Capacity	
Based on Limiting Facility - Supply	5,959
Unused Available System Capacity	
Maximum System Capacity (ERU's)	5,959
Projected 2013 ERU's	4,900
Deficient Capacity (ERU's)	1,059

Operations and Maintenance

8

INTRODUCTION

The City of Stanwood's (City) water operations and maintenance program consists of the following elements.

1. Normal operation of the water supply, treatment and distribution system.
2. Emergency operation of the water system with one or more of the components not available for normal use due to natural or man-made events.
3. Preventive maintenance program for ensuring that the water system, is maintained in accordance with generally accepted standards.
4. Cross-connection control program, as required by state law, to ensure that there is no threat to the integrity of the water supply due to contamination from a customer's operations.

NORMAL OPERATIONS

City Personnel

The City's water department functions under the direction of the Public Works Director. The Utility Superintendent supervises daily operations of the water department and reports to the Public Works Director as shown in **Table 8-1**.

The current water department O&M staff consists of several maintenance personnel that function under the Utility Superintendent, as shown in **Table 8-1**. The water system tasks that are performed by the O&M staff include inspection, testing, installation and repair of system facilities; routine operation and preventive maintenance; record keeping; administrative tasks; general clerical work; and corrective or breakdown maintenance required in response to emergencies.

Table 8-1
Water Department Organization Chart

Personnel Responsibilities

The key responsibilities of the water operations and maintenance staff are summarized below:

Public Works Director – Directs the activities of all divisions of the Public Works Department. Represents the City at regional activities.

Utility Superintendent – Plans and directs the maintenance and operations activities of the water and sewer divisions. May represent the City at regional activities.

Public Works Administrative Support – Provides secretarial and administrative services to the utility divisions.

Public Works Technician Lead (Water) – Performs maintenance and operation of water facilities and related work. Normally is in charge of job site activities.

Water Treatment Plant Operator – Oversees the operation and maintenance of the city's water treatment facilities and is responsible for the CCS program. Conducts complex water sampling and testing procedures and prepares water quality reports for review by the Utility Superintendent.

Public Works Utility Technician (Water) II/III – Performs higher level technical aspects of maintenance, operation and repair of water facilities and related work.

Public Works Utility Technician (Water) I – Performs manual labor and operates light equipment for maintenance and construction of water facilities. May perform meter-reading tasks.

Certification of Personnel

Washington State Law (Chapter 246-292 WAC) requires that the City's water system is operated under the direct supervision of a Certified Operator. The City's water system requires a Water Distribution Manager. The addition of the Bryant Well Field Water Treatment Facility in 2008 added the requirement of a Water Treatment Plant Operator. In addition, specialty certification is required for backflow device inspection and testing. **Table 8-2** shows the current certifications of the City's water O&M staff. It is City policy to maintain a well-qualified, technically trained staff. The City annually allocates funds for personnel training, certification, and membership in professional organizations, such as the American Water Works Association (AWWA). The City believes that the time and money invested in training, certification and professional organizations are repaid many times in improved safety, skills and confidence.

Table 8-2
Personnel Certification

Name	Position	Certification
Kevin Hushagen	Utility Superintendent	WDS2, WDM2
Rod Sundberg	Public Works Technician Lead (Water)	WDS1, WDM2
Gina Melander	Utility Water Treatment Plant Operator I/II (Water)	WDS1, WDM2, WTPO-OIT, CCS
Erik Holbeck	Public Works Utility Technician (Water)	WDM1, WTPO-OIT
Frank Cook	Public Works Utility Technician (Water)	WDM2, CCS

Certification Definitions
WTPO - Water Treatment Plant Operator
WDM - Water Distribution Manager
WDS - Water Distribution Specialist
CCS - Cross Connection Control Specialist

Available Equipment

The water department has several types of equipment available for daily routine operation and maintenance of the water system. The equipment is stored at the City's Public Works facility. If additional equipment is required for specific projects, the City rents or contracts with a local contractor for the services needed. A stock of supplies in sufficient quantities for normal system operation and maintenance and anticipated emergencies is stored at the Public Works facility. A list of major equipment used in the normal operation of the water system is shown in **Table 8-3**.

Table 8-3
Equipment List

Major Equipment
1 - 3 yd Dump Truck
2 - 1 Ton Service Trucks
2 - 1/2 Ton Pickup Trucks
1 - Trailer Mounted Air Compressor
1 - John Deere Backhoe (1yd Bucket)
Minor Equipment
2 - 3" Centrifugal Trash Pumps
2 - Locators
1 - Compactor
Miscellaneous small tools, etc.
Communications Equipment
Cell Phones with Two-Way Radios for All Staff
Readily Available Equipment
1 - 5 yd Dump Truck
1 - 3 yd Dump Truck
1 - Street Sweeper
1 - Vactor Truck

The following representatives typically provide supplies and chemicals to the City.

- Supplies: H.D. Fowler, 6016 29th Drive NE, Marysville, WA 98288, (360) 651-2400
- Supplies: Western Utilities Supply, 4106 134th Street NE, Marysville, WA 98271, (360) 651-1147
- Supplies: Familian Northwest, 1012 132nd SW, Everett, WA 98204, (425) 742-4748

The water department utilizes several different types of communications equipment to ensure a reliable and redundant means of communication within the department. All employees are equipped with cellular telephones and two-way radios that are capable of communicating with similar two-way radios at the Public Works facility and other departments. The cellphones also provide personnel the capability to communicate, as necessary, with other cities, emergency support services and Snohomish County (County).

Routine Operations

Routine operations involve the analysis, formulation, and implementation of procedures to ensure that the facilities are functioning efficiently and meeting pressure requirements and other demands of the system. The utility's maintenance procedures are good, with repairs being made promptly so customers receive high quality water service.

Continuity of Service

As a municipality, the City of Stanwood has the structure, stability, authority and responsibility to ensure that water service will be continuous. For example, changes in the City Council or staff would not have a pronounced effect on the City's customers or quality of service.

Routine Water Quality Sampling

The Washington State Department of Health (DOH) has adopted federal regulations that specify minimum monitoring requirements for water systems. The sampling requirements depend on the population served, source type and treatment provided. The specific requirements are contained in WAC 246-290-300, and the minimum monthly routine coliform sampling requirements are summarized in Table 2 of the April 1999 "Drinking Water Regulations." DOH also provided the City with an annual summary of all required water quality testing. The City currently performs all routine coliform sampling throughout the distribution system. A further discussion of the water quality monitoring program is contained in **Chapter 6** and **Appendix J**.

Cross-connection Control

The City adopted a cross-connection control program in 1987 to comply with WAC 246-290-490 pertaining to contamination of potable water due to cross connections. The Cross-Connection Control Plan was updated with the Comprehensive Water System Plan and is included in **Appendix G**. Backflow prevention devices are required at service connections where a potential for contamination exists, as outlined in the City's Municipal Code. A copy of the Water Utility Regulations Code, Chapter 12.18, which outlines the City's cross-connection control program, is contained in **Appendix N**. The Water Treatment Plant Operator is required to be a certified Cross-connection Control Specialist, as shown in **Table 8-2**.

Recordkeeping and Reporting

DOH has enacted regulations for recordkeeping and reporting that may be found in WAC 246-290-480. The regulations identify recordkeeping and reporting procedures for operations and water quality testing.

Recordkeeping

Records shall be kept for chlorine residual and other information as specified by DOH. DOH requires retention of critical records dealing with facilities and water quality issues as summarized below.

- Bacteriological analysis results: 5 years.
- Chemical analysis results: for as long as the system is in operation.
- Daily source meter readings: 10 years.
- Other records of operation and analyses as may be required by DOH: 3 years.
- Documentation of actions to correct violations of primary drinking water standards: 3 years after last corrective action.
- Records of sanitary surveys: 10 years.

- Project reports, construction documents and drawings, inspection reports, and approvals: life of the facility.

The City's recordkeeping procedure is as follows.

1. The field technicians provide information to the Public Works Technician Lead (Water) or Water Treatment Plant Operator, who must review the information prior to submittal to the Utility Superintendent. Upon review of the information/report, the Utility Superintendent shall be the responsible party to file all documents to the reporting agencies.

2. The information is given to the secretary and is filed at the Public Works facility.

Reporting

1. The City must report the following to DOH.

   - Within 48 hours: A failure to comply with the primary standards or treatment technique requirements specified in Chapter 246-290 WAC.
   - Within 48 hours: A failure to comply with the monitoring requirements specified in Chapter 246-290 WAC.
   - Within 48 hours: A violation of a primary maximum contaminant level (MCL).
   - Within one business day: A backflow incident per WAC 246-290-490 (8)f.

2. The City must submit to DOH all applicable reports required by Chapter 246-290 WAC. Monthly reports are due by the tenth day of the following month, unless otherwise specified.

3. Daily source meter readings must be made available to DOH on request.

4. Total annual water production records for each source must be made available to DOH up on request.

5. A water facilities inventory and report form (WFI) must be submitted to DOH within 30 days of any change in name, category, ownership or responsibility for management of the water system.

6. The City must notify DOH of the presence of:

   - Coliform in a sample within 10 days of notification by the testing laboratory; and
   - Fecal coliform or E. coli in a sample by the end of the business day in which the City is notified by the testing laboratory.

7. When a coliform MCL violation is determined, the City must:

   - Notify DOH within 24 hours of determining acute coliform MCL violations;
   - Notify DOH before the end of the next business day when a non-acute coliform MCL is determined; and
   - Notify water customers in accordance with WAC 246-290-495.

8. If VOC monitoring is required, a copy of the results of the monitoring and any public notice must be sent to DOH within 30 days of receipt of the test results.

Other Reports

Several other reports are required for Washington State agencies, including the Department of Revenue, Department of Labor and Industries, Department of Social and Health Services, Department of Ecology and the Employment Security Department. All these reports are completed according to their instructions.

Operations and Maintenance Records

Facilities Operations and Maintenance Manuals

O&M manuals are available for staff members' reference. These manuals are kept on file at the Public Works facility with relevant copies at major facilities, such as the Bryant Well Field Water Treatment Facility. The City intends to maintain its policies of requiring complete O&M manuals for all new equipment.

Mapping and As-Built Drawing Records

Drawing maintenance is essential to maintenance crews, city planners, developers and anyone else needing to know how the water system is laid out throughout the City. The drawing records are stored in an organized file at the Public Works facility and are maintained by the Public Works Department.

Operations and Maintenance Records

Records are stored at the Public Works facility for the following items.

- Well sounding and static water levels
- Water usage
- Bacteriological tests
- Backflow and cross connections
- Inorganic chemical tests
- Volatile organic compound tests
- Synthetic organic compound tests
- Water samples from new developments
- Lead and copper tests
- Chlorination levels
- Water used for construction
- Hydrant repairs
- Precipitation
- Hydrant meter forms
- Water maintenance
- Pump motor tests
- Hydrant databases

- Confined spaces
- Vandalism forms
- Water consumable inventory
- Water main flushing
- Water main notes
- Water worksheets
- Customer complaints

Safety Procedures and Equipment

Safety is the concern and responsibility of all water O&M staff. The City has taken steps toward educating its staff and providing resources to ensure a safe working environment. The City will strive to improve its safety program on an on-going basis. The American Water Works Association publishes a manual entitled *Safety Practices for Water Utilities (M3)* that describes safety programs and provides guidelines for safe work practices and techniques for a variety of water utility work situations.

The following identifies procedures to be followed for O&M tasks that involve the most common potential work place hazards in the water system.

Use of Chlorine or Chlorine Products

Standard Procedure – Handle with care, provide adequate ventilation, wear safety glasses and rubber gloves.

Use of Water Treatment Chemicals

Standard Procedure – Follow MSDS and facility standard operating procedures contained in the *Bryant Well Field Treatment Facility Operation and Maintenance Manual.*

Working in Confined Spaces

Standard Procedure – Follow state requirements for confined space entry.

Working Around Heavy Equipment

Standard Procedure – Obtain proper training and follow all safety procedures.

Working in Traffic Areas

Standard Procedure – Wear proper clothing and provide adequate signage and flagging for work area.

Working on or Around Water Reservoirs

Standard Procedure – Follow proper safety harness procedures for working on tall structures.

Working in or Around Pump Stations

Standard Procedure – Obtain proper training and follow all safety procedures for working on pumps and electrical equipment.

Working on Asbestos Cement (AC) Water Main

Standard Procedure – Obtain proper training and follow all safety procedures for working with asbestos materials.

The Public Works Department follows all appropriate OSHA and WISHA regulations in its day-to-day operations and complies with the following state requirements:

- WAC 296-62-145 to 14529 Part M – Entry into confined spaces.
- WAC 296-155-650 to 66411 Part N – Shoring of open ditches.
- WAC 296-155-429 – Lockout-tagout for work on energized or de-energized equipment or circuits.
- Chapter 296-155 WAC Part C1 – Fall restraint for access to the top of the City's water reservoirs.
- MUTCD – Traffic control for work in the public right-of-way.

Additional safety procedures are documented in the City's Accident Prevention Program.

EMERGENCY OPERATIONS

Capabilities

The City is well equipped to accommodate short-term system failures and abnormalities. Its capabilities are as follows.

Multiple Supply Capability

The City could lose the operation of one of its groundwater wells without adversely impacting its ability to meet normal customer demands. The City currently has three operational wells and a spring source that could be used to provide customers with water in an emergency.

Multiple Reservoirs

Water storage is provided by four active reservoirs that are located at two different sites. The duplication of reservoirs in each pressure zone provides sufficient redundancy to prevent service disruption when one of the reservoirs is out of service for cleaning, painting or repairs.

Distribution System

The City has attempted to loop water mains wherever possible to improve water circulation (i.e. water quality) and minimize impacts to the system in the event that a portion of the distribution system must be taken out of service for maintenance or repairs.

Emergency Equipment

The City is equipped with the necessary tools to deal with common emergencies. If a more serious emergency should develop, the City will hire a local contractor who has a stock of spare parts necessary to make repairs to alleviate the emergency condition.

Emergency Telephone

Key or on-call personnel can be reached by the Police Department and all emergency situations are resolved by calling 911 or the water emergency number (425) 347-9795.

On-Call Personnel

The on-call person is equipped with a service vehicle and can generally respond to a call within 40 minutes. A list of emergency telephone numbers is provided to each on-call employee. New employees are not placed "on-call" until they are familiar with the water system and maintenance procedures and have met the minimum standards, certification and qualifications.

Material Readiness

Some critical repair parts, tools and equipment are on-hand and kept in fully operational condition. As repair parts are used, they are re-ordered. Inventories are kept current and adequate for most common emergencies that can reasonably be anticipated. The City has ready access to an inventory of repair parts, including parts required for repair of each type and size of pipe within the service area.

Emergency Response Plan and Vulnerability Assessment

A Vulnerability Assessment and Emergency Response Plan have been prepared that conform to the requirements of the Bioterrorism Act of 2002. The documents contain a vulnerability assessment of the City's water system facilities, a contingency operation plan for responding to emergency events, a list of water personnel responsible for making decisions in emergency situations and other elements. The Vulnerability Assessment and Emergency Response Plan also contain detailed action plans and other confidential information that is exempt from public disclosure under the provisions of *RCW 42.56.210*. They are available for review by authorized personnel on a need to know basis. Contact the Emergency Response Plan Administrator for additional details.

Public Notification

The Federal Safe Drinking Water Act (SDWA) and WAC 246-290-495 require purveyors to notify their customers if any of the following conditions occur.

- Failure to comply with a primary MCL described under WAC 246-290-310.
- Failure to comply with a surface water treatment technique.
- Failure to comply with monitoring requirements under Chapter 246-290 WAC.
- Failure to comply with testing requirements.
- Failure to comply with a DOH order.
- Failure to comply with a variance or exemption schedule from DOH.
- If the system is identified as a source of waterborne disease outbreak.

- If DOH issues the system a category red operating permit.
- If DOH issues an order.
- If the system is operating under a variance or exemption.

Specific notice content, distribution channels and time limit requirements, as specified in WAC 246-290-495 must be in compliance when notification is required.

PREVENTIVE MAINTENANCE

Maintenance schedules that meet or exceed manufacturer's recommendations have been established for all critical components in the City's water system. The following schedule is used as a minimum for preventive maintenance.

Storage Facilities

Daily	Visual and audio inspections.
Weekly	Check security and inspect facilities for proper operation.
Annually	Clean and check interior condition, vents, hatches, etc., on reservoirs.
As Needed	Repaint interior and exterior as needed on reservoirs (estimated 10 to 20 year frequency).

Bryant Well Field Treatment Facility

Daily	Perform activities on "Daily Checklist" in facility O&M Manual.
Weekly	Perform activities on "Weekly Checklist" in facility O&M Manual.
Monthly	Perform activities on "Monthly Checklist" in facility O&M Manual.
Bi-Monthly	Perform activities on "Bi-Monthly Checklist" in facility O&M Manual.
Quarterly	Perform activities on "Quarterly Checklist" in facility O&M Manual.
Semi-Annually	Perform activities on "Semi-Annual Checklist" in facility O&M Manual.
Annual	Perform activities on "Annual Checklist" in facility O&M Manual.
As Required	Perform activities on "Variable Checklist" in facility O&M Manual.

Distribution System

Water Mains	
Annually or As Needed	Leak survey.
Annually	Flush.
Wells	
Daily	Log and record volume delivered and current supply rate.
Weekly	Check security.
Annually	Check all valves and screens; check control valve settings.
As Needed	Maintain electrical and mechanical equipment; paint structures and piping.
Booster Pump Stations	
Daily	Visual and audio inspection.
Weekly	Observe and record motor current draw (three phases); check packing; log and record volume delivered and pump motor hours; check motor oil level; measure and record discharge pressure; check motor noise, temperature and vibration.
Weekly	Check security.
Annually	Change motor oil.
Annually	Take inventory of parts, pumps and motors.
As Needed	Calibrate flow meter; maintain electrical and mechanical equipment; paint structures and piping.
Engine Generator Sets	
Weekly	Operate to achieve normal operating temperatures; observe output.
As Needed	Replace fluids and filters in accordance with manufacturer's recommendations (or more frequently depending on amount of use).
As Needed	Perform tune-up; replace parts as necessary.
Pressure Reducing Stations	
Annually	Flush and check all valves and screens; check pressure settings; rebuild and paint every five years, or as necessary.

Isolation Valves	
Annually	Locate valve boxes and check accuracy of measurements and permanence of landmarks in valve record book. Operate full open/closed; uncover where buried; clean out valve boxes and repair as necessary.
Hydrants	
Semi-Annually	Check for leakage and visual damage. Operate and flush; check drain rate; lubricate as necessary; measure pressure; paint as necessary. Check nozzle and cap threads, clean and lubricate per manufacturer's recommendations. Replace lost and damaged gaskets. Check and operate auxiliary valve in accordance with the valve maintenance schedule. Leave in open position. Inspect drain system to ensure proper drainage and protection from freezing weather.
Meters	
2 to 10 Year Intervals	Time and measure volume of meter-delivered flow; dismantle, clean and inspect all parts; replace worn or defective parts; retest meter for accuracy. Frequency varies based on meter size.
Air and Vacuum Release Valve Assemblies	
Annually	Flush and inspect.
Blowoff Assemblies	
Annually	Flush and inspect.
Telemetry and Control System	
Monthly	Visually inspect cabinets and panels for damage, dust and debris.
Semi-Annually	Inspect inside of cabinets and panels for damage, dust and debris.
Semi-Annually	Vacuum clean all modules.
Semi-Annually	Test alarm indicator units.
Semi-Annually	Clean and flush all pressure sensitive devices.
Semi-Annually	Visually inspect all meters to coordinate remote stations.
Annually	Check master and RTUs for proper operation; repair as necessary.

Tools and Equipment

Rolling Stock	
Daily	Check all fluid levels and brakes.
As Needed	Replace fluids and filters in accordance with manufacturer's recommendations (or more frequently depending on type of use).
Tools	
As Needed	Clean after each use; lubricate and maintain as necessary.

STAFFING

The preventive maintenance procedures, as well as the normal and emergency operations of the utility, are described in the previous sections. The hours of labor and supervisory activity required to effectively provide this on-going maintenance and operations schedule forms the basis for determining adequate staffing levels.

Current Staff

The current staff includes supervisory personnel, technicians, maintenance workers, and office personnel engaged in operating and maintaining the water system. There are currently six field crew and two supervisory personnel in the operations and maintenance organization which support the City's water system. Since the Public Works Director/Manager and the Utility Superintendent also support the other City utilities, only a portion of their time is available for the water utility. There is additional staff that could assist the Water Department staff in an emergency but not as part of their routine daily work. Therefore, the water utility is supported by approximately five full-time field staff equivalents.

Recommended Staff Level

A water system is a complex assortment of equipment and parts that require both operation and maintenance. The estimated level of effort required to provide effective operation and maintenance in this document is based on a compilation of national standards, such as those provided by the AWWA, and the pro-forma standards provided by similar water systems in the Pacific Northwest.

The available hours of a person during a year are not the total hours worked. There are many hours spent in training, non-work status and other activities that deduct from the 2,080 hours in pay status during a year. The total available hours are typically reduced to 1,540, as shown in **Table 8-4**.

Table 8-4
Annual Available Hours per Person

Time Available Per Year Per Person	
Beginning Hours Available	2,080
Less average vacation of 3 weeks per year	-120
Less average sick leave of 2 weeks per year	-80
Less holidays of 10 days per year	-80
Less average training of 40 hours per year	-40
Less average small tasks other than above of 1 hour per day	-220
Net Total Available Hours Per Year Per Person	1,540

Preventive maintenance is the work performed to keep the water system in the condition necessary to provide the expected service. Preventive maintenance needs are based on the physical composition of the water system. Each component has a preventive maintenance need that ranges from minor to significant. **Table 8-5** provides the detail of the recommended staffing level for the water system's preventive maintenance program. The largest single activity is the Bryant Well Field Treatment Facility which is comprised of many mechanical devices that require routine maintenance. As shown in **Table 8-5**, approximately 2.3 full-time employees are recommended for the preventive maintenance program.

Table 8-5
Preventive Maintenance Staff Needed

Description	Total Units In System	Frequency (Times/Year)	Time/Unit (Hours)	Time/Year (Hours)
Preventive Maintenance				
Hydrants	355	1	0.5	178
Isolation Valves, Hydrant Valves	1,084	1	0.25	271
Air and Vacuum Release Valves	4	1	0.5	2
Blowoff Assemblies	24	1	0.25	6
Meters	2,292	0.1	2	458
Leak Survey of Water Mains	66 miles	1	0.5	33
Flushing Water Mains	66 miles	1	5	328
Booster Pump Station	3	1	40	120
Pressure Reducing Stations	11	1	6	66
Bryant Water Treatment Facility	1	1	1680	1,680
Sources	5	1	50	250
Reservoirs	5	1	30	150
Telemetry and Control System	1	1	40	40
Total Hours Required				3,581
Total Full Time Staff Required **(based on 1,540 hours per year per person)**				**2.3**

The other component of operations and maintenance staffing is operations. Operations includes all activities other than preventive maintenance, such as water meter reading and repair of broken water mains. As a system ages, many of these activities can be expected to increase. Some operations staff demands can be reduced by replacing infrastructure with more efficient technology, such as using an automated meter reading (AMR) system instead of manually reading water meters on a periodic basis. Each technology or equipment upgrade should be analyzed for cost effectiveness. **Table 8-6** provides the recommended staffing level for the water system's operations program. As shown in **Table 8-6**, approximately 4.2 full-time employees are of staff is recommended for the operations program.

Table 8-6
Operations Staff Needed

Description	Total Units In System	Frequency (Times/Year)	Time/Unit (Hours)	Time/Year (Hours)
Operations				
Monitor System	11	260	0.3	858
False Alarm Response	1	12	2	24
Meter Reading	2,292	12	0.05	1,375
Groundskeeping	8	12	4	384
Inventory	1	1	40	40
Meter Repair/Replace	25	1	4	100
Main Breaks	12	4	8	384
System Failures	4	4	8	128
Hydrant Repairs	10	1	8	80
Service Connections	100	1	8	800
Main Connections	6	1	24	144
Water Quality Sampling	8	12	0.5	48
Administration	1	260	8	2,080
Total Hours Required				6,445
Total Full Time Staff Required (based on 1,540 hours per year per person)				**4.2**

To achieve the level of operations and maintenance shown in **Table 8-7**, approximately 6.5 full-time personnel are required for the water system alone. This is an increase from the previous plan, and reflects the addition of the Bryant Well Field Treatment Facility, in addition to the increased inventory of assets requiring maintenance. The City's current available staff is lacking 1.5 FTE to meet these requirements. In addition, as the water system expands in the future, additional review of staffing needs will be required. The City plans to add staff to optimize preventive maintenance and meet the additional requirements from system expansion, as the budget allows.

Table 8-7
Total Staffing Recommendation

Total Staff Recommended	
Preventive Maintenace Hours	3,581
Operations Hours	6,445
Total Hours	10,027
Total Full Time Staff Required (based on 1,540 hours per year per person)	**6.5**

OPERATION AND MAINTENANCE IMPROVEMENTS

Other proposed improvements not mentioned above are addressed in **Chapter 9** and included in the City's Capital Improvement Program.

Water System Improvements

9

INTRODUCTION

This chapter presents proposed improvements to the City of Stanwood's (City) water system that are necessary to resolve existing system deficiencies and accommodate the projected growth of water customers. The water system improvements were identified from an evaluation of the results of the water system analyses presented in **Chapter 7**. The water system improvements were sized to meet both the existing and future demand conditions of the system.

A Capital Improvement Program number, herein referred to as a CIP number, has been assigned to each improvement. Numbers assigned to the improvements start at the north end of the system and generally, increase incrementally to the south, as shown in **Figure 9-1**, a plan view of the improvements. The improvements are also illustrated in the hydraulic profile of the future water system shown in **Figure 9-2**. The improvements are organized and presented in this chapter according to the following categories.

- Improvements Since 2002
- Water Main Improvements
- Pressure Zone Improvements
- Pressure Reducing Station Improvements
- Facility Improvements
- Miscellaneous Improvements
- Developer Funded Improvements

The remainder of this chapter presents a brief description of each group of improvements, the prioritization criteria, the basis for the cost estimates and the implementation schedule.

DESCRIPTION OF IMPROVEMENTS

This section provides a general description of each group of improvements and an overview of the deficiencies they will resolve. Most of the improvements are necessary to resolve existing system deficiencies. However, improvements have also been identified for some of the undeveloped areas of the 365 Zone to illustrate the major facilities that will be required when development occurs in those areas. The locations of improvements in the undeveloped areas are shown schematically in **Figure 9-1** and will most likely be altered to fit the layout of the future developments. The CIP numbers for these improvements have a "DF" prefix (example: DF1). The costs associated with these improvements shall be borne by the developers, rather than the existing water customers.

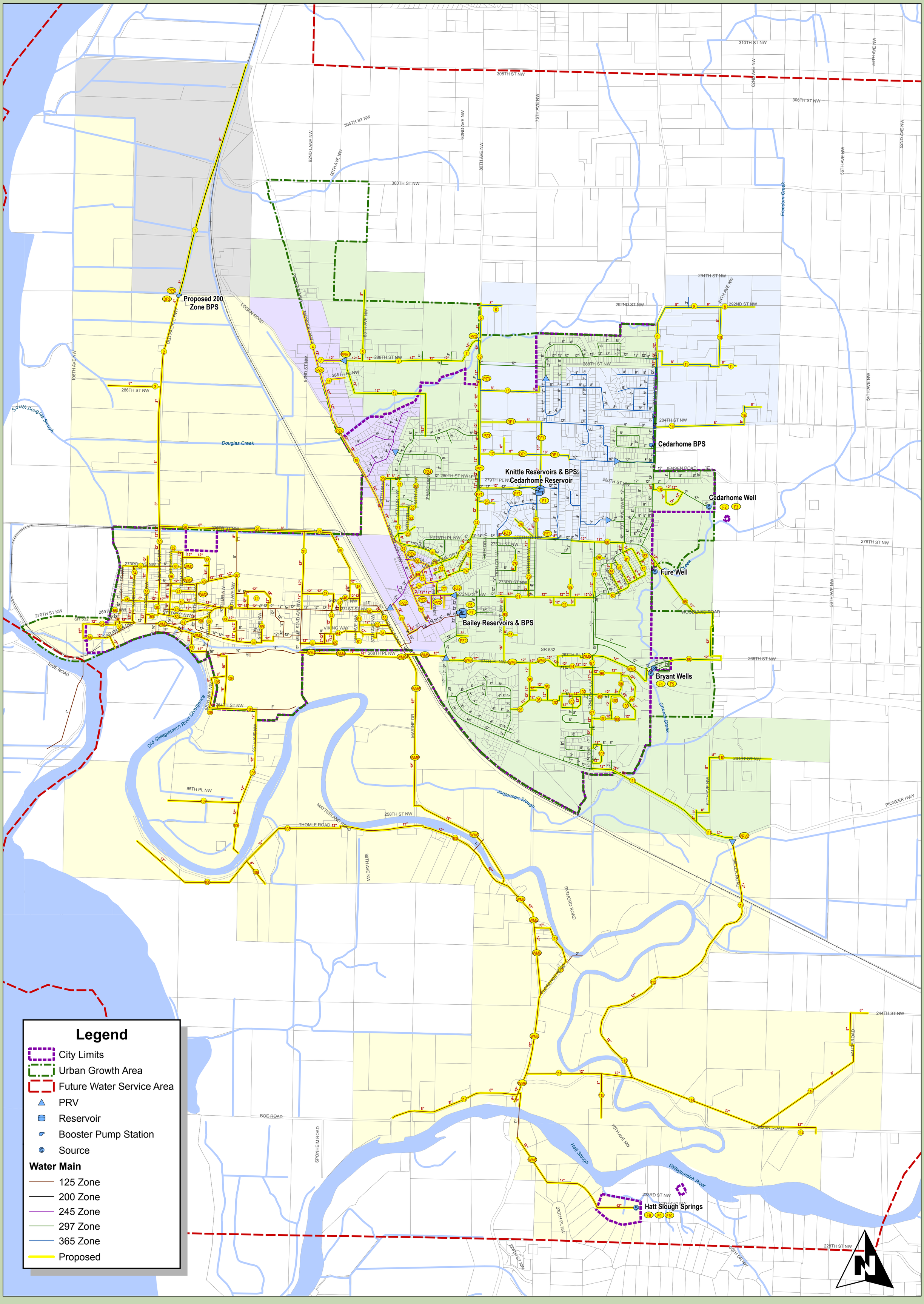

CITY OF STANWOOD
COMPREHENSIVE WATER SYSTEM PLAN

FIGURE 9-1
PROPOSED WATER SYSTEM IMPROVEMENTS

1 in = 1,000 ft

0 1,000 2,000

DRAWING IS NOT TO SCALE
IF BAR IS NOT 2" LONG

J:\data\STA\107-088\GIS\MAPS\STA-WSP-Fig9-1.mxd DATE REVISED: OCT 2, 2009 BY: MRC

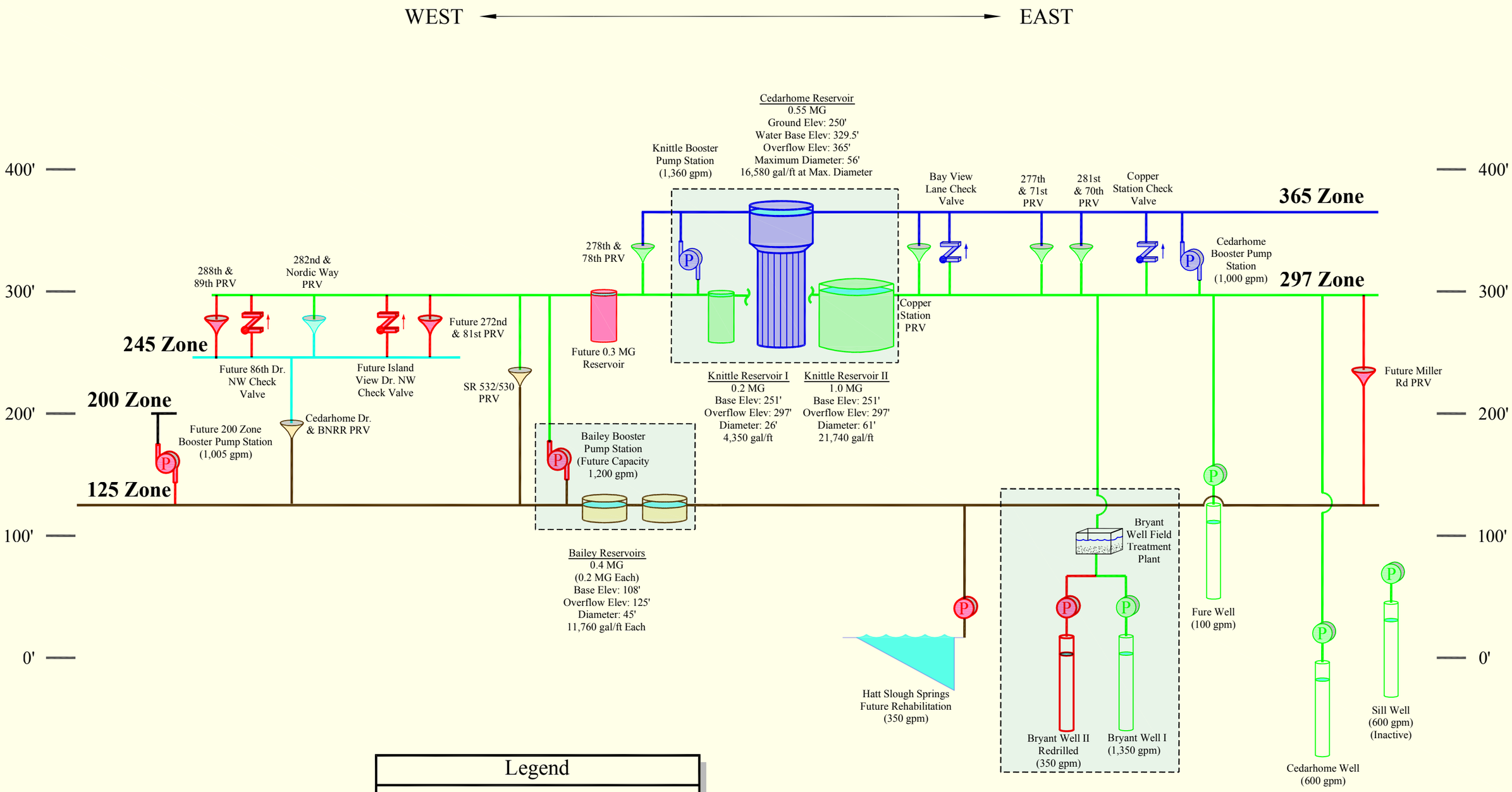

Legend

- 125 Zone
- 200 Zone
- 245 Zone
- 297 Zone
- 365 Zone
- Proposed Improvements (Red)
- Well Pump
- Booster Pump Station
- Pressure Reducing Station
- Check Valve
- Facilities at Same Site

RH2 ENGINEERS PLANNERS SCIENTISTS

CITY OF STANWOOD

Figure 9-2
Proposed Improvements Hydraulic Profile
City of Stanwood
Comprehensive Water System Plan

Date: JUL 9, 2009 Filename: STA\107-088\CAD\STA-HPPROP.DWG

Water System Improvements Since the Last Water System Plan

The water system has undergone several changes since 2002, when the City last updated its Comprehensive Water System Plan. The City has implemented a majority of the recommended projects as scheduled in the 2002 Capital Improvement Program (CIP) including the development of the Cedarhome Well, construction of the Bryant Well Field Treatment Facility, and the installation of a new telemetry and supervisory control system. **Table 9-1** lists the CIP projects that have been completed, along with additional projects that have also been completed since the City's last comprehensive plan. In addition to these major projects, the City has implemented many smaller projects, including water main replacements and extensions.

Table 9-1
Improvements Completed Since 2002

Project Description	Year
16" Water Main in SR 532	2003
Telemetry and Supervisory Control System	2003
16" Water Main from Bailey Reservoirs to 84th Drive NW	2004
Cedarhome Booster Pump Station	2006
242/125 Zone PRV	2006
271st Street Water Main Improvements	2006
Copper Station PRV	2007
Cedarhome Well	2008
Bryant Well 297 Zone Transmission Main	2008
Bryant Well Field Treatment Facility	2008
Cedarhome Reservoir (in progress)	2009

Water Main Improvements

The following water main improvements were identified from the results of the distribution and transmission system analyses discussed in **Chapter 7**. Most of the water main improvements will replace existing distribution water main and are grouped in the "Annual Water Main Replacement Program" project (CIP WM1). The individual water main improvement projects within this group are numbered 1 through 117, as shown in **Figure 9-1**. The other water main improvements are mostly larger diameter water mains that function more like transmission than distribution mains and are identified as individual projects (CIP WM2 through WM6).

CIP WM1: Annual Water Main Replacement Program

Deficiency: Most of the water main improvements shown in **Figure 9-1** are required to resolve existing system fire flow deficiencies caused primarily by undersized water mains. Many areas also contain non-standard water main materials or are known to have a high occurrence of water main leaks or breaks.

Improvement: Replace existing water main with new ductile iron water main in accordance with the City's construction standards. The individual water main improvements grouped under this project are numbered 1, 2, 3, etc., as shown in **Figure 9-1**. The selection of specific projects will be accomplished annually during the City's budget development process and will be guided by the prioritization presented later in this chapter. This provides the City with the flexibility to coordinate these projects with other projects that may occur within the same area. An allowance of $100,000 per year has been established for the annual replacement of water mains.

CIP WM2: Corrosion Improvements in 100th Avenue NW, 272nd Place NW and 99th Avenue NW

Deficiency: The water main adjacent to the Josephine Sunset Home has a high rate of leaks and breaks due to significant corrosion on steel parts of the buried appurtenances.

Improvement: Following the results of the distribution system corrosion study under CIP M2, install new 12-inch ductile iron water main in 100th Avenue NW from 274th Place NW to 272nd Place NW; in 272nd Place NW from 102nd Avenue NW to 99th Avenue NW; and in 99th Avenue NW from 272nd Place NW to 271st Street NW. Construct water main as recommended in the study for future water main installations to reduce the rate of future corrosion. Based on the results of the study, it may be feasible to replace only the corroded appurtenances and install other corrosion improvements without installing new water main.

Coordinate with Josephine Sunset Home to ensure domestic water supply is available as necessary to the customer. This may require the customer to install a second metered connection if continuous water supply is needed throughout the duration of the project's construction.

CIP WM3: Water Main South of State Route (SR) 532 from 102nd Avenue NW to 98th Drive NW

Deficiency: The existing 6-inch and 12-inch asbestos cement mains from the 125 Zone storage and supply facilities are 45 to 60 years old. The existing 12-inch water main has a history of water main breaks. Both of these mains are vital transmission mains for providing water supply to Twin City Foods and all of downtown Stanwood.

Improvement: Install new 16-inch ductile iron water main on the south side of SR 532 from 98th Drive NW west to the connection of the 12-inch and 18-inch water main at approximately 100th Avenue NW. Install new 12-inch ductile iron water main along the south side of SR 532 from the connection of the 12-inch and 18-inch water main at approximately 100th Avenue NW to 102nd Avenue NW.

CIP WM4: Water Main South of SR 532 from 92nd Avenue NW to 84th Drive NW

Deficiency: The existing 12-inch asbestos cement mains from the 125 Zone storage and supply facilities are 45 years old. The existing 12-inch water main has a history of water main breaks and is a vital transmission main for providing water supply to Twin City Foods and all of downtown Stanwood.

Improvement: Install new 16-inch ductile iron water main from the south side of SR 532 at 84th Drive NW west to 92nd Avenue NW.

CIP WM5: Water Main from Bryant Wells to 84th Drive NW South of SR 532

Deficiency: With the completion of the Bryant Well Field Treatment Facility in 2008, the Bryant Wells now provide supply directly to the 297 Zone instead of the 125 Zone. Transmission main in the 297 Zone is needed to convey supply from the wells to the 125 Zone via PRV stations.

Improvement: Install new 12-inch ductile iron water main from Bryant Well No. 2 to the south side of SR 532, and west along the south side of SR 532 to 84th Drive NW.

CIP WM6: Water Main from Hatt Slough Springs to SR 532

Deficiency: Portions of the existing 8-inch asbestos cement main from Hatt Slough Springs are over 60 years old and other portions are 45 years old. The main has a history of water main breaks. The main is the only transmission from Hatt Slough Springs to the customers throughout the 125 Zone.

Improvement: Install new 12-inch ductile iron water main from Hatt Slough Springs in Marine Drive to the intersection of Marine Drive and SR 532.

Future Water Main Extensions and Replacements

All new water main extensions and replacements shall be installed in accordance with the City's Water System Standards, which are included in **Appendix H**. All new water mains shall be ductile iron pipe and sized by hydraulic analysis to ensure that all pressure, flow and velocity requirements stated in **Chapter 5** are met. In general, new water mains that will carry fire flow in residential areas shall be a minimum of 8 inches in diameter and looped for multi-family residential developments. New water mains in commercial, business park, industrial and school areas shall be a minimum of 12 inches in diameter and looped.

Pressure Zone Improvements

The following pressure zone improvements will improve various low pressure problem areas throughout the water system. The improvements will also consolidate the many smaller pressure reduced zones to improve flow and reliability. A brief description of the existing deficiency and the improvement itself is provided below.

CIP PZ1: 297 to 365 Zone Conversion and Water Main

Deficiency: A portion of the 297 Zone in the higher elevations near the Knittle Reservoirs has low pressures that do not meet the minimum pressure requirements.

Improvement: The water services located along 279th Place NW will be converted to the 365 Zone upon completion of the proposed 12-inch water main extension from the discharge side of the existing Knittle Booster Pump Station to 80th Avenue NE. The water services along Stauffer Road and 78th Drive NW will also be converted to the 365 Zone upon completion of the proposed 8-inch water main extension from the south end of the existing 8-inch water main in Bayview Lane to the existing 8-inch ductile iron main at 78th Drive NW. The existing water main north of 276th Street NW will be isolated from the 12-inch 297 Zone main in 276th Street NW at Stauffer Road and 78th Drive NW. The existing Summerset PRV in 278th Place NW will be abandoned. The

improvements also include proposed 12-inch water main that will extend north in 80th Avenue NW to connect with the water main in 282nd Place NW, such that the water main in 282nd Place NW is converted to the 365 Zone. At the intersection of 80th Avenue NW and 279th Place NW, extend 8-inch water main south to the dead-end main in 278th Place NW to convert these services to the higher pressures of the 365 Zone.

CIP PZ2: 125 and 242 to 245 Zone Conversion

Deficiency: A portion of the 125 Zone in the higher elevations near the Bailey Reservoirs contains low pressures that do not meet the minimum pressure requirements. The existing 242 Zone is served by a long, dead-end 2-inch steel water main that is undersized and does not provide a reliable water supply to its customers.

Improvement: The 242 Zone and a portion of the 125 Zone piping along Pioneer Highway, Cedarhome Drive and the areas in between will be converted to the 245 Zone, as shown in **Figure 9-1**. Extend the 12-inch ductile iron 297 Zone piping in 272nd Street NW from 81st Drive NW to Pioneer Highway by replacing the existing 6-inch asbestos cement pipe. Abandon the dead-end 242 Zone 2-inch water main and the associated 242 Zone pressure reducing station. Extend 8-inch ductile iron water main in 82nd and 83rd Drive NW from the proposed 12-inch main in 272nd Street NW south to the dead-end of the streets. Extend 8-inch ductile iron water main from the 12-inch 297 Zone piping in Olympic View Place to the cul-de-sac that was served by the 242 Zone 2-inch main. Move all water services from the 242 Zone 2-inch water mains to the new water mains, and install individual pressure reducing valves on water services now served by the 297 Zone to maintain a maximum pressure of 80 psi at the meter.

Install a 297/245 Zone pressure reducing station near 272nd Street NW and 81st Drive NW. The large pressure reducing valve should be 8 inches, and the small valve should be 3 inches. The pressure reducing station should also contain a pressure relief valve that will be sized during the design of the improvements. Extend the 12-inch water main from the existing 12-inch main in Cedarhome Drive to create a loop with the existing 2-inch PVC water main near Carlson Trucking. Adjust the setpoints for the existing PRV station in Cedarhome Drive, which is not currently in operation, to open upon suppressed pressure in the 125 Zone, such as during an emergency condition. Install a closed zone valve to isolate the Bailey Reservoir 16-inch transmission main from the parallel 12-inch water main at the Pioneer Highway crossing. Construction of these improvements should coincide with CIP 77.

CIP PZ3: Conversion of Northern 297 Zone to 365 Zone

Deficiency: A portion of the 297 Zone in the higher elevations at the north end of 80th Avenue NW has moderately low pressures. Development that occurs north of 288th Street NW will need to be served by the 365 Zone.

Improvement: After completion of CIP PZ1 and CIP 12, convert the existing 8-inch ductile iron water main that parallels the existing 6-inch PVC main near approximately 287th Place NW to the 365 Zone by extending 8-inch water main south along 80th Avenue NW to the proposed 365 Zone main at 282nd Place NW (PZ1). Convert the existing 2-inch and 6-inch water main north of 288th Street NW to the 365 Zone by isolating the water main from the 297 Zone and connecting to the 365 Zone at 288th Street NW and 80th Avenue NW.

CIP PZ4: Conversion of Middle Pressure Zones to 245 Zone

Deficiency: The existing system has four small pressure reduced zones served by five pressure reducing stations. The independent zones do not provide adequate flow and reliability.

Improvement: After completion of CIP PRV1, CIP PZ2, and CIP 7, 20, 21, 22 and 23 water main improvements, consolidate the pressure reduced zones and convert them to the new 245 Zone. Extend new 12-inch ductile iron water main in Pioneer Highway from Larson Road to the existing 255 Zone water main. Install two 8-inch check valves in 86th Drive NW and 276th Place NW to provide supply to the lower elevations of the 297 Zone if pressures drop significantly. Abandon the 255 pressure reducing station at the intersection of 280th Street NW and 83rd Drive NW and the 265 pressure reducing station at the intersection of 276th Street NW and 80th Drive NW. Install a zone valve at the intersection of Cedarhome Drive and Park Drive to isolate the 297 and 245 Zones. Abandoning these pressure reducing valves, and installing the check valves and the zone valve will resolve the existing low pressure problems. Open the closed valves at the intersection of Cedarhome Drive and Pioneer Highway and at the intersection of Cedarhome Road and 274th Street NW.

Adjust the set points of the three 297/245 Zone pressure reducing valves to maintain a downstream hydraulic elevation of 245 feet. Construction of these improvements should coincide with CIP 67 and CIP 69.

CIP PZ5: Conversion of Northern 125 Zone to 200 Zone

Deficiency: A portion of the 125 Zone in the higher elevations at the north end of Old Pacific Highway contains low pressures that do not meet minimum pressure requirements.

Improvement: Locate a site and construct a booster pump station near the intersection of Logan Road and Old Pacific Highway. For planning purposes, the station will have an initial capacity of approximately 5 gallons per minute (gpm) to supply peak domestic demands and will be equipped with a hydropneumatic tank. Consideration shall be given to accommodate the future installation of fire flow pumps planned under CIP DF2. The actual capacity and configuration of the booster pump station will be determined during the preliminary design phase of the project. An engine generator set for emergency power supply will be included in the improvements.

Pressure Reducing Station Improvements

The following pressure reducing station improvements were identified to resolve existing system deficiencies, but have been sized to accommodate the system's future demands.

CIP PRV1: 255 Zone PRV (288th and 89th) Replacement

Deficiency: The existing pressure reducing station is undersized to provide adequate supply to the existing 255 Zone/future 245 Zone during a fire flow or other high demand event.

Improvement: Replace the existing station with a new larger station at the intersection of 288th Street NW and 89th Avenue NW. The large pressure reducing valve should be 6 inches, and the small valve should be 2 inches. The station should also include a pressure relief valve, sized during the design, to relieve pressures in the 245 Zone in the event of a failure of one of the pressure

reducing valves. The new station should be installed near the same time as the proposed 12-inch water main in 288th Street NW (CIP 7).

CIP PRV2: Additional 297/125 PRV on Miller Road

Deficiency: The 125 Zone south of SR 532 is currently served by one transmission main. There is also a long dead-end main on Miller Road.

Improvement: Install a pressure reducing station at the intersection of Pioneer Highway and Miller Road. The large pressure reducing valve should be 8 inches, and the small valve should be 3 inches. The station should also include a pressure relief valve, sized during design, to relieve pressures in the 125 Zone in the event of a failure of one of the pressure reducing valves. The new station should be installed after the replacement and extension of the 3-inch main in Pioneer Highway (CIP 111) and concurrently with the replacement and extension of the 4-inch main in Miller Road (CIP 112).

Facility Improvements

The following water system facility improvements were identified from the results of the water system analyses that are discussed in **Chapter 7**. The improvements are primarily necessary to resolve existing system deficiencies, but have also been sized to accommodate projected growth.

CIP F1: Knittle Reservoir No. 2 Recoating

Deficiency: The interior and exterior of Knittle Reservoir No. 2 needs to be recoated every 15 to 20 years, based on the typical life of coatings on steel tanks.

Improvement: Thoroughly inspect and sample the interior and exterior coatings of Knittle Reservoir No. 2 to determine the properties of the existing coating and the extent of the required recoating. Recoat the interior and exterior to prevent premature corrosion of the facilities.

CIP F2: Cedarhome Well Study

Deficiency: The Cedarhome Well produces sand that may clog water treatment equipment, increase maintenance time and create excessive wear on pumping equipment over time.

Improvement: Evaluate the Cedarhome Well to determine the cause of the excessive sand production. Identify improvements to resolve the deficiency in the well. Improvements that may be considered include the installation of a deep well pump control valve, replacement of the filter pack, and redevelopment or redrilling of the well.

CIP F3: Cedarhome Well Improvements

Deficiency: The Cedarhome Well produces sand that may clog water treatment equipment, increase maintenance time and create excessive wear on pumping equipment over time.

Improvement: Based on the recommendations in the Cedarhome Well Study under CIP F2, construct improvements to resolve the deficiency in the well. Because the scope of these improvements are unknown at this time, the cost of this CIP item should be re-evaluated following the completion of CIP F2.

CIP F4: Cedarhome Well Water Right Transfer

Deficiency: In 2008, the Washington State Department of Ecology (Ecology) approved the transfer of a majority of the Sill Well water rights to the Cedarhome Well. To transfer the remaining 100 gpm, the City must complete pump tests to demonstrate that additional withdrawal at this location will not result in an increased risk for seawater intrusion.

Improvement: Perform pump tests on the Cedarhome Well to confirm the risk of seawater intrusion is not present at the full water right amount of 600 gallons per minute (gpm). Coordinate with Ecology to transfer the remaining 100 gpm of the Sill Well water right to the Cedarhome Well.

CIP F5: Bryant Well No. 2 Replacement

Deficiency: The yield of Bryant Well No. 2 has declined significantly and efforts to rehabilitate the well have not been successful. The capacity of Bryant Well No. 2 is needed to meet the projected future supply needs of the system.

Improvement: Replace the existing Bryant Well No. 2 by drilling a new groundwater well with a maximum production rate of approximately 700 gpm. Locate the replacement well within the designated area on the Bryant Well Field Treatment Facility site. The replacement well should be completed at a similar depth or deeper than the existing Bryant Well No. 2, which was completed at a depth of approximately 200 feet. Decommission the existing Bryant Well No. 2 or designate the existing well as a water level monitoring well.

CIP F6: Bryant Well Field Treatment Facility Sewer

Deficiency: The City currently hauls waste generated from the Bryant Well Field Treatment Facility in trucks to the Wastewater Treatment Plant.

Improvement: Construct approximately 375 lineal feet of 4-inch diameter gravity sewer pipe from the Bryant Well Field Treatment Facility to the future Lift Station 9. The gravity sewer pipe shall be installed in accordance with the City's construction standards.

CIP F7: Bailey Booster Pump Station Rehabilitation

Deficiency: The Bailey Booster Pump Station is a small, aging facility that is necessary for the transfer of water from the 125 Zone to the 297 Zone. The old, wood-frame building is too small for the four pumps, pipes and electrical equipment inside. In addition, the facility is not equipped with an engine generator set receptacle to allow backup power supply in the event of a power outage.

Improvement: Construct a new building for the Bailey Booster Pump Station. For planning purposes, the capacity of the station will be approximately 1,200 gpm. The final capacity and configuration of the booster pump station will be determined during the preliminary design phase of the project. An engine generator set receptacle for emergency power supply will be included in the improvements.

CIP F8: Bailey Reservoir Altitude Valve

Deficiency: With the completion of the Bryant Well Field Treatment Facility and the Cedarhome Well, the majority of the system's supply capacity is now being provided directly to the 297 Zone. An altitude valve is needed to supplement supply to the 125 Zone that is currently provided by Hatt Slough Springs and a PRV station located at SR 532 and Pioneer Highway.

Improvement: Install an altitude valve and below-grade vault on the Bailey Reservoir site. Extend new 12-inch ductile iron water main from the altitude valve to the existing 297 Zone 12-inch water main in 81st Drive NW. Connect the downstream side of the altitude valve to the Bailey Reservoir supply lines. The altitude valve should be equipped with a delayed opening feature to facilitate water turnover in the reservoirs.

CIP F9: Hatt Slough Springs Collection Box Improvements

Deficiency: The collection boxes for the Hatt Slough Springs are not watertight. The source may be susceptible to contaminants from surface water flow entering the collection boxes.

Improvement: Construct watertight seals for the Hatt Slough Springs collection boxes.

CIP F10: Hatt Slough Springs Study

Deficiency: The existing collection system does not have the capacity to fully utilize the water right for the spring source. The stability of the steep slope adjacent to the facility should be verified. The Department of Health has recommended a sampling of the source water to rule out any surface water influence on the spring.

Improvement: Conduct an evaluation of the Hatt Slough Springs to determine the source's ability to produce water supply at a rate equivalent to the water right amount. Identify improvements for increasing the capacity of the source. Recommend a sampling schedule and procedures for the City to implement to determine the potential for surface water influence on the spring. Also evaluate the stability of the steep slope adjacent to the facility and recommend measures to resolve any concerns regarding the slope's stability.

CIP F11: Hatt Slough Springs Rehabilitation

Deficiency: Hatt Slough Springs is an aging facility. The building is a wood-frame structure with a steel roof and chicken wire covered windows. The facility is dimly lit and generally in poor condition. The pumps and interior piping are also aging and in need of replacement. The facility is not equipped with an engine generator set to allow backup power supply in the event of a power outage. The existing collection system does not have the capacity to fully utilize the water right for the spring source. The Department of Health has recommended a sampling of the source water to rule out any surface water influence on the spring.

Improvement: Based on the recommendations in the Hatt Slough Springs study under CIP F10, construct improvements to increase the capacity of the source, prevent any potential surface water influence, replace the existing facility and stabilize the adjacent slope, as necessary. Replacement of the existing facility will include a new structure, pumps, mechanical, electrical and chlorination equipment. The capacity of the facility will be equivalent to the springs' instantaneous water right of 1,125 gpm, and the configuration will be determined during the preliminary design phase of the project. Install an engine generator set for providing standby power supply in the event of a power outage.

CIP F12: 297 Zone Reservoir Site Acquisition

Deficiency: The storage analysis in **Chapter 7** indicates that the system will have insufficient capacity to meet the projected future storage requirements of the system.

Improvement: Purchase a reservoir site to accommodate a new 297 Zone reservoir. Preference should be given to sites that are highest in elevation so that they minimize the potential amount of dead storage within the proposed reservoir. The hydraulic operation of a new tank within the existing distribution system will be considered during the site selection.

CIP F13: 297 Zone Reservoir Design and Construction

Deficiency: The storage analysis in **Chapter 7** indicates that the system will have insufficient capacity to meet the projected future storage requirements of the system.

Improvement: Construct a reservoir in the 297 Zone with a minimum useful storage capacity of 0.3 million gallons (MG) to meet the projected needs of the system through the 20-year planning period. During the predesign effort, evaluate the hydraulic operation of the system based on the actual tank site acquired and identify any additional improvements.

Miscellaneous Improvements

The following miscellaneous improvements are planning efforts and program elements that are required to comply with various State of Washington water regulations.

CIP M1: System-wide Flushing Program

Deficiency: The City does not currently have a system-wide water main flushing program. Periodic flushing is necessary to remove sediment that accumulates in the distribution system.

Improvement: Develop and implement a system-wide flushing program. Identify flushing locations and prepare a uni-directional flushing schedule that encourages flushing away from sources of supply. Flushing should be performed at least annually. Document flushing procedures and measures for tracking water used for coordination with the Water Use Efficiency Program.

CIP M2: Distribution System Corrosion Study and Improvements

Deficiency: The steel parts on buried water main appurtenances in the downtown area of Stanwood have a high rate of corrosion. Significant corrosion has caused leaks in some areas where water main is less than 10 years old.

Improvement: Prepare a study to evaluate the source of the significant corrosion on the appurtenances within the distribution system in downtown Stanwood. Recommend improvements to resolve existing deficiencies and identify construction standards for future installations. Based on the results of the study, install improvements to reduce the rate of corrosion and leaks within the system.

CIP M3: Water Use Efficiency Program

Deficiency: The existing water system most likely has leaks, based on an average 3-year rolling average distribution system leakage of 15 percent. Several water use efficiency measures must be carried out on an ongoing basis to comply with state requirements.

Improvement: The City will continue its water main replacement program to reduce the amount of older and potentially leaking water mains. The City will also implement a comprehensive leak detection/water main repair program to further reduce the amount of distribution system leakage. The City will consider implementing increasing block rate structures in its upcoming water rate study to further discourage excess water use. A detailed program to establish standard methods for tracking non-revenue authorized consumption will be implemented. The City will perform other ongoing water use efficiency measures, including public education programs, as outlined in the Water Use Efficiency Program included in **Appendix F**.

CIP M4: Cross-Connection Control Program

Deficiency: The City does not have an updated ordinance, facility risk inventory and cross-connection control program that meets current state requirements.

Improvement: The City's Municipal Code will be updated to address the regulations in Chapter 246-290 WAC and the current program contained in the Cross-Connection Control Program included in **Appendix G**. The City will develop and implement an evaluation program that assesses the risk of existing water service connections. Potential high-risk cross-connection premises will be evaluated first. The City will then evaluate other premises, based on potential risk to the water system and budget availability. The City will carry out other cross-connection control program requirements as outlined in **Appendix G**.

CIP M5: Wellhead Protection Program

Deficiency: The City does not have a wellhead protection ordinance and program that meets current state requirements.

Improvement: The City will develop and adopt a wellhead protection ordinance that addresses permitted uses and performance standards for properties located within designated wellhead protection areas. In addition, the City will perform a more accurate delineation of the wellhead protection area boundaries utilizing analytical models, hydrogeologic mapping and computer flow models. The City also will also conduct a detailed inventory of potential sources of groundwater contamination. The City will carry out other wellhead protection program requirements as outlined in the Wellhead Protection Program included in **Appendix K**.

CIP M6: Comprehensive Water System Plan Update

Deficiency: WAC 246-290-100 requires that the City's Comprehensive Water System Plan be updated every six years and submitted to the Department of Health for review and approval.

Improvement: The City will update and submit its Comprehensive Water System Plan every six years to comply with state requirements.

Developer Funded Improvements

The following water system facility improvements have been identified for the undeveloped areas of the City's existing service area to illustrate the major facilities that will be required to properly serve that area. The locations of the facilities are shown schematically in **Figure 9-1**. The costs associated with these improvements shall be borne by the developers, rather than the existing water customers, unless over-sizing the improvements provides benefit to existing customers.

CIP DF1: 365 Zone Water Main

Deficiency: Development that occurs in the higher elevations of the 365 Zone in the Cedarhome area will require transmission mains to convey supply and storage.

Improvement: Install new 16-inch ductile iron water main from the Knittle Reservoir site north to 284th Street NW and from the existing dead-end 16-inch water main at 281st Place NW and 73rd Avenue NW west to the new 16-inch water main from the Knittle Reservoirs. Also install new 8-inch ductile iron water main in 284th Street NW from 80th Avenue NW to the new 16-inch water main at approximately 76th Avenue NW, and in approximately 281st Place NW from approximately 78th Avenue NW east to the new 16-inch water main from the Knittle Reservoirs.

CIP DF2: 200 Zone Fire Flow Pumps

Deficiency: Fire flow is not currently provided to the rural area along Old Pacific Highway, north of Logan Road.

Improvement: Future development in the rural area along Old Pacific Highway, north of Logan Road, may require fire flow from the City's water system. After completion of CIP PZ5, install fire flow pumps in the future 200 Zone booster pump station. The pump station shall have redundancy in the pumping configuration such that the maximum planning-level fire flow requirement for the zone can be achieved with one pump out of service.

ESTIMATING COSTS OF IMPROVEMENTS

Project costs for the proposed improvements were estimated based on costs of similar, recently constructed water projects in the City and around the Puget Sound area, and are presented in 2009 dollars. The cost estimates include the estimated construction cost of the improvement and indirect costs estimated at 35 percent of the construction cost for engineering preliminary design, final design and construction management services, permitting, legal and administrative services. The construction cost estimates include a 10 percent contingency and sales tax of 8.6 percent.

Construction cost estimates for water main projects were determined from the water main unit costs (i.e., cost per foot length) shown in **Table 9-2** and the proposed diameter and approximate length of each improvement.

Table 9-2
Water Main Unit Costs

Water Main Diameter (inches)	Construction Cost Per Foot Length (2009 $/LF)
8	$125
12	$136
16	$154

The unit costs for each water main size are based on estimates of all construction related improvements, such as materials and labor, for the water main installation, water services, fire hydrants, fittings, valves, connections to the existing system, trench restoration, asphalt surface restoration and other work necessary for a complete installation. The unit costs also include a contingency and sales tax. Additional costs were added to some water main improvements to cover anticipated, increased costs related to the project location and degree of difficulty.

PRIORITIZING IMPROVEMENTS

The water system improvements were prioritized from established criteria to formulate a schedule that identifies projects with the most deficiencies and greatest need for improvement to be completed prior to projects with fewer deficiencies. A description of the criteria and method for prioritizing each category of improvements is provided below.

Water Main Improvements

Table 9-3 lists criteria that were established for prioritizing the water main improvements. The criteria are based on the underlying deficiencies of the existing water main that will be replaced by the proposed water main improvements. The criteria are arranged in six different categories with a weight factor assigned to each category. The criterion given the most weight is the Existing Water Main Fire Flow Capability and the Existing Water Main Maintenance/Breaks categories.

The Existing Water Main Fire Flow Capability category ranks the water main improvements based on the ability of the existing water mains to provide the required fire flow, as determined from the results of the hydraulic analyses in **Chapter 7**. The Existing Water Main Maintenance/Breaks category ranks the water main improvements based on the number of reported leaks or breaks that the City currently has on record. The Coordination with Other Projects in Same Area category ranks the water main improvements based on other City projects scheduled for the same area. The Existing Water Main Year of Installation category ranks the water main improvements based on the age of the existing water mains. The Existing Water Main Material category ranks the water main improvements based on the material of the existing water main. The Existing Water Main Benefit Area category ranks the water main improvements based on the size of the area that will benefit from the replacement.

Table 9-3
Water Main Improvements Priority Ranking Criteria

Points	Category	Weight Factor	Weighted Points
	Existing Water Main Maintenance/Breaks		
3	High Maintenance Requirements/High Frequency of Breaks	4	12
2	Annual Maintenance/Low Frequency of Breaks	4	8
1	No Maintenance and No History of Problems	4	4
	Existing Water Main Fire Flow Capability		
3	Available Fire Flow is 69% or Less of Required Fire Flow	4	12
2	Available Fire Flow is 70-89% of Required Fire Flow	4	8
1	Available Fire Flow is 90-100% or More of Required Fire Flow	4	4
	Coordination with Other Projects in Same Area		
3	Other Project Scheduled within 2 Years	3	9
2	Other Project Scheduled within 6 Years	3	6
1	Other Project Scheduled Beyond 6 Years or Not Scheduled	3	3
	Existing Water Main Year of Installation		
3	Before 1965	3	9
2	1965 - 1980	3	6
1	After 1980	3	3
	Existing Water Main Material		
3	Asbestos Cement	2	6
2	Galvanized Iron, Steel, or Cast Iron	2	4
1	Ductile Iron or PVC	2	2
	Existing Water Main Benefit Area		
3	Large Benefit Area (i.e. transmission main)	2	6
2	Medium Benefit Area	2	4
1	Small Benefit Area (i.e. localized area)	2	2

The water main priority ranking criteria were applied to the annual water main replacement projects, which are grouped under CIP WM1. CIP 1 through 117, as shown in **Figure 9-1**, are presented in **Table 9-4** with their priority ranking.

Table 9-4
Prioritized Annual Water Main Replacement Projects

No.	Priority Rank	Priority Points	Estimated Cost	Size Length (ft)	Size Diam (in)	Description In	Description From	Description To
1	M	28	$1,669,000	5,430	8	Old Pacific Hwy	Logan Rd	Pioneer Hwy NW
2	M	30	$1,635,000	5,270	8	Old Pacific Hwy	Logan Rd	276th St NW
3	L	18	$248,000	1,200	8	~286th St NW	Old Pacific Hwy	Dead-end
4	L	27	$266,000	1,160	12	Pioneer Hwy NW	~Myrtle Rd NW	Dead-end
5	L	24	$333,000	1,610	8	88th Ave NW	288th St NW	Dead-end
6	L	25	$273,000	850	8	80th Ave NW	Larson Rd	~292nd St NW
				470	8	~292nd St NW	80th Ave NW	Dead-end
7	H	40	$910,000	3,940	12	Larson Rd	Pioneer Hwy NW	80th Ave NW
8	L	18	$419,000	2,020	8	292nd St NW	Cedarhome Rd	Dead-end
9	L	27	$316,000	1,370	12	Cedarhome Rd	288th St NW	292nd St NW
10	L	18	$273,000	1,320	8	64th Ave NW	292nd St NW	288th St NW
11	L	18	$455,000	2,190	8	288th St NW	Cedarhome Rd	64th Ave NW
12	M	29	$1,317,000	3,370	12	80th Ave NW	Larson Rd	279th Pl NW
13	L	25	$1,306,000	1,960	12	89th Ave NW	~285th St NW	288th St NW
				1,370	12	~285th St NW	89th Ave NW	284th St NW
14	L	23	$109,000	530	8	286th Pl NW	Pioneer Hwy NW	89th Ave NW
15	L	24	$301,000	1,450	8	~286th St NW	80th Ave NW	~75th Ave NW
16	L	18	$574,000	2,770	8	284th St NW	68th Ave NW	Dead-end
17	L	18	$187,000	550	8	~281st Pl NW	80th Ave NW	~78th Ave NW
				350	8	~78th Ave NW	~281st Pl NW	Dead-end
18	M	31	$385,000	420	16	280th St NW	68th Ave NW	Cedarhome Elem.
				1,220	12	Cedarhome Elem.	Loop	Loop
19	M	28	$577,000	2,500	12	Pioneer Hwy NW	~Myrtle Rd NW	276th Pl NW
20	M	34	$223,000	350	8	280th St NW	86th Dr NW	85th Dr NW
				730	8	86th Dr NW	Pioneer Hwy NW	280th St NW
21	L	25	$263,000	1,270	8	85th Dr NW	276th Pl NW	280th St NW
22	L	25	$217,000	650	8	84th Ave NW	280th St NW	278th St NW
				400	8	278th St NW	85th Dr NW	84th Ave NW
23	M	35	$251,000	570	8	84th Dr NW	278th St NW	276th Pl NW
				580	12	276th Pl NW	84th Dr NW	Pioneer Hwy NW
24	M	32	$260,000	1,130	12	80th Ave NW	279th Pl NW	276th Pl NW
25	L	23	$80,000	390	8	278th Pl NW	80th Ave NW	Dead-end
26	L	23	$131,000	630	8	Stauffer Rd	276th St NW	Dead-end
27	M	29	$127,000	610	8	~75th Ave NW	276th St NW	~278th Ave NW
28	M	28	$735,000	3,290	8	276th St NW	102nd Ave NW	92nd Ave NW
				260	8	96th Ave NW	276th St NW	Heritage Park
29	M	28	$506,000	1,870	12	276th St NW	92nd Ave NW	~BNRR
				330	12	~BNRR	276th St NW	Cedar St
30	H	36	$591,000	1,980	12	102nd Ave NW	270th St NW	276th St NW
31	M	31	$409,000	1,770	12	92nd Ave NW	271st St NW	276th St NW
32	M	31	$54,000	260	8	274th Pl NW	101st Ave NW	100th Ave NW
33	M	28	$270,000	1,080	12	Josephine Home Loop	100th Ave NW	272nd Pl NW
				100	8	Josephine Home Loop	~98th Ave NW	Hydrant
34	H	46	$430,000	840	8	103rd Dr NW	273rd Pl NW	271st St NW
				530	12	103rd Dr NW	271st St NW	SR 532
35	M	34	$484,000	1,520	12	102nd Dr NW	~274th Ave NW	SR 532
36	H	41	$308,000	1,140	8	101st Ave NW	274th Pl NW	271st St NW
				310	12	101st Ave NW	271st St NW	270th St NW

* Priority: H = High, M = Medium, L = Low

Table 9-4
Prioritized Annual Water Main Replacement Projects (continued)

No.	Priority Rank	Priority Points	Estimated Cost	Size Length (ft)	Size Diam (in)	Description In	Description From	Description To
37	L	20	$172,000	750	12	96th Ave NW	272nd Pl NW	271st St NW
38	M	28	$201,000	880	12	273rd Ave NW	104th Dr NW	102nd Ave NW
39	H	36	$54,000	260	8	273rd Ave NW	101st Ave NW	100th Ave NW
40	M	28	$215,000	940	12	272nd Pl NW	99th Ave NW	96th Ave NW
41	H	36	$122,000	590	8	272nd St NW	101st Ave NW	99th Ave NW
42	M	28	$316,000	1,370	12	Stanwood Middle Sch.	271st St NW	271st St NW
43	M	28	$164,000	720	12	272nd St NW	92nd Ave NW	90th Ave NW
44	M	34	$211,000	920	12	90th Ave NW	272nd St NW	~279th St NW
45	M	28	$149,000	650	12	~BNRR	88th Ave NW	272nd St NW
46	M	35	$99,000	440	12	~272nd St NW	88th Ave NW	~89th Ave NW
47	M	35	$69,000	300	12	~89th Ave NW	271st St NW	~272nd St NW
48	H	43	$715,000	550	8	271st St NW	104th Dr NW	103rd Dr NW
				2,610	12	271st St NW	103rd Dr NW	94th Dr NW
49	M	28	$223,000	970	12	1 block north of Main St.	101st Ave NW	Camano Dr
50	H	51	$564,000	1,860	12	270th St NW	102nd Dr NW	271st St NW
51	H	43	$70,000	310	12	Camano St	270th St NW	SR 532
52	H	36	$95,000	420	12	98th Dr NW	270th St NW	SR 532
53	M	34	$255,000	290	12	~97th Dr NW	271st St NW	~270th St NW
				260	12	~270th St NW	~97th Dr NW	~96th Dr NW
				470	12	~96th Dr NW	~270th St NW	SR 532
				100	8	~269th St NW	~96th Dr NW	Hydrant
54	L	26	$900,000	1,250	12	SR 532	~109th Ave NW	103rd Dr NW
				320	12	~109th Ave NW	SR 532	Saratoga Dr
55	L	26	$744,000	620	12	Saratoga Dr	~109th Ave NW	~105th Ave NW
				280	12	Twin City Foods	Saratoga Dr	Dead-end
56	M	32	$216,000	300	12	104th Dr NW	SR 532	Saratoga Dr
				60	12	105th Dr NW	~270th St NW	~270th St NW
57	H	36	$167,000	730	12	South of SR 532	Ex. 12" in SR 532	98th Dr NW
58	L	26	$296,000	1,290	12	North of SR 532	~97th Dr NW	~93rd Dr NW
59	M	28	$99,000	430	12	94th Dr NW	SR 532	270th St NW
60	H	36	$114,000	500	12	271st St NW	88th Ave NW	Florence Rd
61	H	38	$141,000	610	12	88th Ave NW	271st St NW	South of Viking Wy
62	H	40	$152,000	660	12	270th St NW	88th Ave NW	Florence Rd
63	L	22	$212,000	920	12	Florence Rd	271st St NW	SR 532
64	H	38	$430,000	1,870	12	Viking Wy	~91st Ave NW	Florence Rd
65	M	28	$278,000	1,210	12	North of SR 532	92nd Ave NW	90th Ave NW
66	M	31	$275,000	1,330	8	Hennings Dr	276th Pl NW	Cedarhome Dr
67	M	34	$247,000	1,080	12	Street East of Pioneer	277th Pl NW	Cedarhome Dr
68	M	34	$109,000	530	8	Park Dr	Street East of Pioneer	Cedarhome Dr
69	H	42	$122,000	160	12	Cedarhome Dr	Pioneer Hwy NW	Street East of Pioneer
				420	8	Cedarhome Dr	Street East of Pioneer	Park Dr
70	H	48	$255,000	1,230	8	Cedarhome Dr	Park Dr	276th St NW
71	H	49	$266,000	1,280	8	80th Dr NW	274th St NW	276th St NW
72	L	24	$120,000	580	8	~82nd Dr NW	Cedarhome Dr	Cedarhome Rd
73	M	32	$62,000	300	8	83rd Dr NW	Cedarhome Dr	Cedarhome Rd
74	H	51	$291,000	1,410	8	Cedarhome Rd	Pioneer Hwy NW	80th Dr NW
75	H	40	$223,000	970	12	Pioneer Hwy NW	Cedarhome Dr	~270th St NW

* Priority: H = High, M = Medium, L = Low

Table 9-4
Prioritized Annual Water Main Replacement Projects (continued)

No.	Priority Rank	Priority Points	Estimated Cost	Size Length (ft)	Size Diam (in)	Description In	Description From	Description To
76	H	36	$204,000	890	12	East of BNRR	Cedarhome Dr	~269th St NW
77	H	40	$166,000	320	8	83rd Dr NW	Cedarhome Dr NW	272nd St NW
				490	8	272nd St NW	83rd Dr NW	81st Dr NW
78	L	18	$96,000	460	8	77th Dr NW	274th St NW	~275th St NW
79	H	42	$319,000	1,380	12	76th Dr NW	276th St NW	272nd St NW
80	M	32	$281,000	1,220	12	276th St NW	~73rd Dr NW	70th Ave NW
81	L	22	$193,000	210	12	County Pl NW	276th St NW	Church Creek Lp NW
				700	8	County Pl NW	Church Creek Lp NW	Church Creek Lp NW
82	M	32	$391,000	1,880	8	Church Creek Lp NW	County Pl NW	Church Creek Crl NW
83	M	32	$83,000	360	12	Church Creek Ct NW	Church Creek Lp NW	Dead-end
84	L	22	$120,000	580	8	Village Pl NW	Church Creek Lp NW	Church Creek Lp NW
85	L	22	$139,000	670	8	Manor Pl NW	Church Creek Lp NW	Church Creek Lp NW
86	L	22	$50,000	220	12	Tyler Pl NW	72nd Ave NW	Hydrant
87	H	38	$208,000	910	12	72nd Ave NW	Tyler Pl NW	272nd St NW
88	L	23	$1,679,000	2,400	12	Woodland Rd	4" @ 68th Ave NW	64th Ave NW
				1,360	12	64th Ave NW	Woodland Rd	268th St NW
				1,180	12	268th St NW	64th Ave NW	Bryant Wells
89	M	35	$96,000	420	12	Stanwood High Sch.	272nd St NW	Athl. Field Dead-end
90	H	40	$508,000	1,490	16	78th Ave NW	272nd St NW	267th Pl NW
91	H	40	$509,000	2,210	12	272nd St NW	78th Dr NW	72nd Ave NW
92	M	35	$193,000	840	12	Stanwood High Sch.	Main Campus Loop	Main Campus Loop
93	M	29	$62,000	300	8	Cecilia Wy	78th Ave NW	Dead-end
94	M	28	$183,000	800	12	276th St NW	~74th Ave NW	72nd Ave NW
95	M	30	$308,000	1,340	12	Pt Susan Middle Sch. Rd	267th Pl NW	77th Ave NW
96	M	28	$287,000	1,250	12	Pt Susan Middle Sch. Rd	Main Campus Loop	Main Campus Loop
97	M	30	$414,000	1,800	12	72nd Ave NW	267th Pl NW	262nd St NW
98	L	22	$409,000	1,780	12	Camano Village Loop	72nd Ave NW	72rd Ave NW
99	L	22	$202,000	880	12	~69th Ave NW	Camano Village	Cinema
100	L	26	$464,000	2,010	12	Cinema Loop	265th St NW	265th St NW
101	L	22	$105,000	460	12	~263rd Pl NW	72nd Ave NW	~69th Ave NW
102	M	28	$588,000	2,550	12	Merrill Gardens	72nd Ave NW	Pt Susan Middle Sch.
103	L	22	$223,000	970	12	Maple Court Apts. Loop	72nd Ave NW	72nd Ave NW
104	H	38	$600,000	1,520	16	West of WWTP	Irvine Slough	264th St NW
				880	16	264th St NW	~98th Ave NW	95th Ave NW
105	H	42	$252,000	1,220	8	98th Ave NW	West of WWTP	264th St NW
106	H	46	$939,000	4,070	12	Leque Rd	264th St NW	Thomle Rd
107	M	32	$332,000	1,600	8	95th Pl NW	Leque Rd	Dead-end
108	L	26	$2,252,000	9,760	12	Thomle Rd	~104th Dr NW	Marine Dr
109	L	26	$139,000	670	8	~95th Ave NW	Thomle Rd	Dead-end
110	L	18	$664,000	1,800	8	Woodland Rd	Pioneer Hwy NW	261st St NW
				1,400	8	261st St NW	Woodland Rd	Dead-end
111	M	32	$1,405,000	3,750	12	Pioneer Hwy NW	72nd Ave NW	Miller Rd
112	L	22	$2,734,000	7,460	12	Miller Road	Pioneer Hwy NW	Norman Rd
113	L	21	$446,000	2,150	8	Florence Rd	Marine Dr	Marine Dr
114	M	30	$2,133,000	6,910	12	Norman Rd	Marine Dr	Dead-end
115	L	21	$206,000	1,000	8	70th Ave NW	Norman Rd	Dead-end
116	L	26	$864,000	4,160	8	Valde Rd	Norman Rd	244th St NW
117	L	26	$652,000	3,140	8	Boe Rd	Marine Dr	Dead-end
Total			**$48,403,000**					

* Priority: H = High, M = Medium, L = Low

Other Improvements

The additional water main, pressure zone, pressure reducing station and facility improvements were prioritized based on existing deficiencies, safety concerns, and maintenance and capacity requirements. Improvements to resolve pressure deficiencies identified in **Chapter 7** were given the highest priority; therefore, they were scheduled for completion within the 6-year planning period. The miscellaneous improvements were prioritized based on regulatory requirements, funding availability and an assessment of other water system needs. The priority order of these improvements is reflected in the schedule of improvements presented in the next section.

SCHEDULE OF IMPROVEMENTS

The improvement prioritization results were used to assist in establishing an implementation schedule that can be used by the City for preparing its 6-year CIP and yearly water budget. The implementation schedule for the proposed improvements is shown in **Table 9-5**. An allowance of $200,000 per year has been established for the annual replacement of smaller water mains. The City will identify and schedule the replacement of these smaller water mains during its annual budget process. This provides the City with the flexibility to coordinate these projects with road or other projects in the same areas. The developer funded improvement projects and their associated cost estimates are shown near the bottom of the table. However, the implementation dates for these improvements is not shown due to the uncertainty of the timing of the future developments that will be responsible for these improvements.

Future Project Cost Adjustments

All cost estimates shown in the tables are presented in year 2009 dollars. Consideration for the current bidding conditions, which have resulted in significantly reduced construction costs, was not made in the cost estimates. It is assumed that construction costs for years prior to the current recession period (2007 and prior) will be representative of the majority of the planning period.

It is recommended that future costs be adjusted to account for the effects of inflation and changing construction market conditions at the actual time of project implementation. Future costs can be estimated using the Engineering News Record (ENR) Construction Cost Index for the Seattle area or by applying an estimated rate of inflation that reflects the current and anticipated future market conditions.

Table 9-5
Proposed Improvements Implementation Schedule

No.	Description	Estimated Cost (2009 $)	20-Year Schedule of Improvements Planned Year of Project and Estimated Cost in 2009 $								
			2010	2011	2012	2013	2014	2015	2016-22	2023-30	2031+
	Water Main Improvements										
WM1	Annual Water Main Replacement Program	$48,403,000	$50K	$75K	$75K	$200K	$200K	$200K	$1,200K	$1,600K	$44,803K
WM2	Corrosion Improvements in 100th, 272nd & 99th	$401,000			$134K	$267K					
WM3	Water Main South of SR 532 from 102nd to 98th	$305,000	$305K								
WM4	Water Main South of SR 532 from 92nd to 84th	$780,000							$780K		
WM5	Water Main from Bryant Wells to 84th	$2,230,000							$2,230K		
WM6	Water Main from Hatt Slough Springs to 84th	$4,615,000								$4,615K	
	Pressure Zone Improvements										
PZ1	297 to 365 Zone Conversion and Water Main	$785,000	$196K	$589K							
PZ2	125 & 242 Zone to 245 Zone Conversion	$551,000				$184K	$367K				
PZ3	Conversion of Northern 297 Zone to 365 Zone	$351,000								$351K	
PZ4	Conversion of Middle Press. Zones to 245 Zone	$1,131,000						$377K	$754K		
PZ5	Conversion of Northern 125 Zone to 200 Zone	$540,000			$270K	$270K					
	Pressure Reducing Station Improvements										
PRV1	255 Zone PRV Replacement	$100,000					$100K				
PRV2	Additional 297/125 Zone PRV on Miller Rd	$95,000								$95K	
	Facility Improvements										
F1	Knittle Reservoir No. 2 Recoating	$338,000							$338K		
F2	Cedarhome Well Study	$60,000			$60K						
F3	Cedarhome Well Improvements	$100,000						$100K			
F4	Cedarhome Well Water Right Transfer	$27,000	$27K								
F5	Bryant Well No. 2 Replacement	$800,000				$267K	$533K				
F6	Bryant Well Field Treatment Facility Sewer	$68,000			$68K						
F7	Bailey Booster Pump Station Rehabilitation	$1,013,000							$1,013K		
F8	Bailey Reservoir Altitude Valve	$103,000		$103K							
F9	Hatt Slough Springs Collection Box Impr.	$68,000	$68K								
F10	Hatt Slough Springs Study	$50,000			$50K						
F11	Hatt Slough Springs Rehabilitation	$1,350,000								$1,350K	
F12	297 Zone Reservoir Site Acquisition	$270,000						$270K			
F13	297 Zone Reservoir Design & Construction	$540,000							$540K		
	Miscellaneous Improvements										
M1	System-wide Flushing Program	$100,000	$5K	$5K	$5K	$5K	$5K	$5K	$30K	$40K	
M2	Distribution System Corrosion Study & Impr.	$10,000	$10K								
M3	Water Use Efficiency Program	$118,000	$11K	$11K	$11K	$5K	$5K	$5K	$30K	$40K	
M4	Cross-Connection Control Program	$100,000	$5K	$5K	$5K	$5K	$5K	$5K	$30K	$40K	
M5	Wellhead Protection Program	$300,000				$75K	$75K	$10K	$60K	$80K	
M6	Comprehensive Water System Plan Update	$360,000							$120K	$240K	
M7	Water Rate Study	$40,000	$40K								
Total Estimated Costs of City Funded Impr.		**$66,102,000**	**$717K**	**$788K**	**$678K**	**$1,278K**	**$1,291K**	**$972K**	**$7,125K**	**$8,451K**	**$44,803K**
	Developer Funded Improvements										
DF1	365 Zone Transmission Main	$1,025,000	Timing of Project Based on Timing of Future Developments								
DF2	200 Zone Fire Flow Pumps	$270,000	Timing of Project Based on Timing of Future Developments								
Total Estimated Costs of Developer Funded Impr.		**$1,295,000**									

Financial Analysis

10

INTRODUCTION

The objective of a water system financial plan is to identify the total cost of providing water service and provide a financial program that allows the water utility to remain financially viable during execution of its short-term (6-year) and long-term (20-year) Capital Improvement Program (CIP). This viability analysis considers the historical financial condition of the utility, the sufficiency of utility revenues to meet current and future financial and policy obligations, and the financial impact of executing the CIP. Furthermore, the financial plan provides a review of the utility's current rate structure with respect to rate adequacy, equity, promotion of water conservation and customer affordability.

PAST FINANCIAL PERFORMANCE

This section includes a historical summary of financial performance as reported by the City of Stanwood (City) on the Fund Resources and Uses Arising from Cash Transactions statements. The City operates on a cash basis and does not track accruals, depreciation, assets or liabilities.

The City's past financial performance is summarized as follows.

- Operating expenditures have increased by about 20 percent in 2007 and 2008, while increasing under 10 percent in the previous three years. In addition, charges for services have increased over 10 percent per year on average.
- The City appears to have repaid an outstanding debt issuance in 2004, as debt service drops off in 2005.
- The City has realized positive net cash flow in all years of this historical summary.
- Capital revenues peaked in 2006 and have declined through 2008 reporting.
- Some capital funds are not reported on if activity falls below a certain level; therefore, year to year comparisons may not be consistent. It appears that capital spending and borrowing activity increased in 2006.

Comparative statements for the previous six years (2003 through 2008) are summarized in **Table 10-1** and **Table 10-2** for the operating and construction funds.

Table 10-1
Fund Resources and Uses Arising from Cash Transactions – Water Operating

Water Fund 421		2003	2004	2005	2006	2007	2008
Beginning Net Cash and Investments		$ 193,460	$ 92,752	$ 171,775	$ 259,755	$ 434,243	$ 620,420
Revenues:							
340	Charges for Services	733,417	850,228	881,473	972,654	1,118,945	1,241,984
360	Miscellaneous	22,650	28,683	26,911	47,922	54,018	54,071
390	Other Financing Sources				100,000		112,000
	Total Revenues and Other Sources	756,067	878,911	908,384	1,120,576	1,172,963	1,408,055
	Total Resources	949,527	971,663	1,080,159	1,380,331	1,607,206	2,028,476
Operating Expenditures:							
530	Physical Environment	418,417	448,994	491,100	525,103	620,071	747,443
	Total Operating Expenditures	418,417	448,994	491,100	525,103	620,071	747,443
591-593	Debt Service	110,987	118,519	34,251	34,692	41,648	40,069
	Total Expenditures	529,404	699,995	481,495	518,615	594,641	743,565
597	Other Financing Uses	327,371	232,375	232,375	190,000	170,000	266,000
	Total Uses	856,775	932,370	713,870	708,615	764,641	1,009,565
Excess (Deficit) of Resources Over Uses		92,752	39,293	366,289	671,716	842,565	1,018,911
380	Nonrevenues	-	-	-	-	-	-
580	Nonexpenditures	$ -	$ -	$ 115,052	$ 96,292	$ 155,067	$ 233,077
Ending Net Cash and Investments		**$ 92,752**	**$ 171,775**	**$ 207,381**	**$ 434,243**	**$ 620,420**	**$ 729,887**

Table 10-2
Fund Resources and Uses Arising From Cash Transactions – Water Construction

Water Construction Funds (422-435)		2003	2004	2005	2006	2007	2008 [1]
Beginning Net Cash and Investments		$ 324,067	$ 403,728	$ 611,300	$ 2,269,371	$ 3,315,898	$ 410,733
Revenues:		-	-	-	-	-	
330	Intergovernmental	238,750					
340	Charges for Services	59,900	92,700	63,400	112,547	67,400	28,716
350	Fines and Forfeits						
360	Miscellaneous	4,409	8,132	27,305	1,179,639	977,106	36,702
390	Other Financing Sources	371,371	475,000	460,000	1,170,000	729,381	750,000
	Total Revenues and Other Sources	674,430	575,832	550,705	2,462,186	1,773,887	815,417
	Total Resources	998,497	979,560	1,162,005	4,731,557	5,089,785	1,226,151
591-593	Debt Service	-	-	-	-	-	-
594-596	Capital Outlay	606,019	368,260	164,674	1,875,011	2,149,745	3,278,811
	Total Expenditures	606,019	368,260	164,674	1,875,011	2,149,745	3,278,811
597	Other Financing Uses	-	-	-	800,000	628,381	-
	Total Uses	606,019	368,260	164,674	2,675,011	2,778,126	3,278,811
Excess (Deficit) of Resources Over Uses		392,478	611,300	997,331	2,056,546	2,311,659	(2,052,660)
380	Nonrevenues	-	-	-	1,259,352	-	2,485,150
580	Nonexpenditures	-	-	-	-	-	-
Ending Net Cash and Investments		**$ 392,478**	**$ 611,300**	**$ 997,331**	**$ 3,315,898**	**$ 2,310,658**	**$ 432,490**

[1] Due to level of activity, only water construction fund 422 activity was reported for 2008 (previous years include combined 422-435)

CURRENT FINANCIAL STRUCTURE

This section summarizes the current financial structure of the water utility, which is used as the baseline for the capital financing strategy and financial forecast developed for this financial plan.

Funds

The City currently maintains seven water funds.

421. Water Fund

The Water Fund receives all operating revenues and makes all operating expenditures and debt repayment.

422. Water Construction Fund

The Water Construction Fund receives connection fee revenue and loan proceeds for projects. Capital projects, other than those with a dedicated fund, are paid from this fund.

423. Cedarhome Plant Investment Fund

This fund collects the Cederhome plant investment fee revenue, which is dedicated to funding allowable Cederhome projects and repaying related debt service.

424. Water Plant Investment Fund

The Water Plant Investment Fund collects all general plant investment fee and connection charge revenue. Funds are then made available for capital projects either by transfer to a project fund or directly from the Water Plant Investment Fund.

425. Bryant Well Rehabilitation Fund

Fund 425 was created to manage borrowing and funding for the Bryant Well Rehabilitation project. There is no budgeted fund balance or activity for 2009.

426. Water Improvements Fund

This fund manages borrowing and funding for water improvement projects. There is no budgeted fund balance or activity for 2009.

435. Bryant Well Rehabilitation

Fund 435 is also a project-dedicated fund. Though there is no budgeted 2009 activity, Fund 435 maintains a small balance.

Financial Policies

A brief summary of the key financial policies employed by the City, as well as those recommended for the City's further study and evaluation, are discussed below.

Minimum Fund Balances

Operating reserves are designed to provide a liquidity cushion to ensure that adequate cash working capital will be maintained to deal with significant cash balance fluctuations, such as seasonal fluctuations in billings and receipts, unanticipated cash expenses or lower than expected revenue collections. The financial plan incorporates a minimum balance target of 60 days of operations and maintenance (O&M).

A capital contingency reserve is an amount of cash set aside in case of an emergency should a piece of equipment or a portion of the utility's infrastructure fail unexpectedly. Additionally, the reserve could be used for other unanticipated capital needs, including capital project cost overruns. The forecast incorporates a capital contingency reserve equal to 1 percent of the utility's fixed assets.

System Reinvestment

The purpose of system reinvestment funding is to provide for the replacement of aging system facilities to ensure sustainability of the system for ongoing operation. Each year, the utility's assets lose value, and as they lose value they move toward eventual replacement. This accumulating loss in value and future liability is typically measured for reporting purposes through an annual depreciation expense, which is based on the original cost of the asset over its anticipated useful life. While this expense reflects the consumption of the existing asset and its original investment, the replacement of that asset will likely cost much more when factoring in inflation and construction conditions. Therefore, the added annual replacement liability is even greater than the annual depreciation expense.

The City operates on a cash basis and does not track accruals or asset balances and depreciation. The City does maintain asset records that allow a reasonable estimate of depreciation expense for the purpose of calculating an appropriate level of annual system reinvestment funding. This analysis incorporates a policy of annual system reinvestment funding equal to the annual depreciation expense (estimated) less the annual principal repayment, phased in over the first six years of the study period.

Debt Management

The City has five outstanding Public Works Trust Fund loans that are currently being repaid by the Water Fund. The City actively pursues low cost loans where appropriate, and would issue revenue bonds to finance capital project costs in excess of available cash resources.

AVAILABLE FUNDING ASSISTANCE AND FINANCING RESOURCES

Feasible long-term capital funding strategies must be defined to ensure adequate resources are available to fund the CIP. In addition to the utility's resources, such as accumulated cash reserves and rate funded capital and connection charges, capital needs can be met from outside sources such as grants, low interest loans and bond financing.

Utility Resources

Utility resources appropriate for funding capital needs include accumulated cash above the operating reserve threshold; rate revenues designated for capital spending purposes; and capital related revenues, such as capital Plant Investment Fees and other connection fees.

Plant Investment Fee

A Plant Investment Fee (PIF), also called a connection charge as provided for in RCW 35.92.025, refers to a one time charge imposed on new customers as a condition of connecting to the utility system. The purpose of the PIF is two-fold: 1) to promote equity between new and existing customers; and 2) to provide a source of revenue to fund capital projects. PIFs provide a way for new customers to share in the capital costs incurred to support their addition to the system. PIF revenues provide a source of cash

flow that is used to support utility capital needs; however, the PIF revenue can only be used to fund utility capital projects or pay debt service incurred to finance capital projects. In the absence of a PIF, growth-related capital costs would be borne in large part by existing customers. In addition, the net investment in the utility already collected from existing customers, whether through rates, charges and/or assessments, would be diluted by the addition of new customers, effectively subsidizing new customers with prior customers' payments. To establish equity, a PIF should recover a proportionate share of the existing and future infrastructure costs from a new customer. From a financial perspective, a new customer should become financially equivalent to an existing customer by paying the PIF.

The City currently imposes a PIF of $5,200 per equivalent residential unit (ERU) to all new water customers and an additional $2,570 to Cedarhome Plant Investment Fund area customers. Based upon current system investment, projected infrastructure needs identified in the 20-year CIP and system capacity, an increase to a maximum of $6,122 per ERU can be supported. The financial plan presented herein assumes the utility-wide PIF would be implemented in 2011 after further study during the City's planned 2010 rate study, at which time the Cedarhome PIF would be evaluated as well. This analysis assumes the current level of Cedarhome PIF. The updated utility-wide PIF calculation is shown in **Table 10-3** and charges by meter size are shown in **Table 10-4.**

Table 10-3
Plant Investment Fee Calculation

Component	Cost Basis	Customer Base	Charge per Unit
Existing Facilities	$ 28,906,964	7,158	$4,038
Future Facilities	14,913,381	7,158	$2,083
Total	**$ 43,820,345**		**$6,122**

Table 10-4
Plant Investment Fee Charges by Meter Size

Meter Size	Meter Capacity Ratio	Existing PIF	Proposed PIF
5/8 x 3/4-inch	1.00	$5,200	$6,122
1 1/2-inch	5.00	$26,000	$30,609
2-inch	8.00	$41,600	$48,975
3-inch	16.00	$83,200	$97,949
4-inch	25.00	$130,000	$153,045
6-inch	50.00	$260,000	$306,091
8-inch	80.00	$416,000	$489,745

Local Facilities Charges

While a PIF is the manner in which new customers pay their share of general facilities costs, local facilities funding is used to pay the costs of local facilities that connect each property to the system's infrastructure. Local facilities funding is often overlooked in a rate forecast since it is funded upfront by either connecting customers and developers or through an assessment to properties, but never from rates. Although these funding mechanisms do not provide a capital revenue source toward funding CIP costs, the discussion of these charges is included because they impact the new system customers.

There are a number of mechanisms that can be considered toward funding local facilities. One of the following scenarios typically occurs: a) the utility charges a connection fee based on the cost of the local facilities (under the same authority as the PIF); b) a developer funds the extension of the system to their development and turns those facilities over to the utility (contributed capital); or c) a local assessment is set up called a Utility Local Improvement District (ULID/LID) that collects tax revenue from benefited properties.

A Local Facilities Charge (LFC) is a variation of the connection charge authorized by RCW 35.92.025. It is a City-imposed charge to recover the cost related to extending service to local properties. Often called a front-footage charge and imposed on the basis of water main footage "fronting" a particular property, it is usually implemented as a reimbursement mechanism to a utility for the cost of a local facility that directly serves a property. It is a form of connection charge and, as such, can accumulate up to ten years of interest. LFCs typically apply to instances where no developer-installed facilities are needed through developer extension due to the prior existence of available mains already serving the developing property.

A Developer Extension is a requirement that a developer install onsite and sometimes offsite improvements as a condition of extending service. These are in addition to the PIF required and must be built to utility standards. Utilities are authorized to enter into developer extension agreements under RCW 35.91.020. Part of the developer extension agreement between a utility and developer might include a latecomer agreement, resulting in a latecomer charge to new connections to the developer extension.

Latecomer Charges are a variation of developer extensions whereby a new customer connecting to a developer-installed improvement makes a payment to a utility based on their share of the developer's cost (RCW 35.91.020). The utility passes this payment to the developer who installed the facilities. This is part of the developer extension process, and defines the allocation of costs and records latecomer obligations on the title of affected properties. No interest is allowed, and the reimbursement agreement cannot exceed 15 years in duration.

A LID/ULID is another mechanism for funding infrastructure that assesses benefited properties based on the special benefit received by the construction of specific facilities (RCW 35.43.042). Most often used for local facilities, some ULIDs also recover related general facilities costs. Substantial legal and procedural requirements can make this a relatively expensive process, and there are mechanisms by which a ULID can be rejected by a majority of property ownership within the assessment district boundary.

Outside Sources

Government Programs

Grants and low cost loans for Washington State utilities are available from the Departments of Ecology and Community Trade and Economic Development. Each includes programs for which the City might be eligible, but are primarily targeted at sewer programs or low income and/or rural communities.

Washington State Department of Ecology

The Department of Ecology (Ecology) Water Quality Program administers three major funding programs that provide low interest loans, grants or loans and grant combinations for projects that protect, preserve and enhance water quality in Washington State. These are primarily for wastewater projects and are not applicable to the City's water CIP.

Further detail is available in the Funding Guidelines found at http://www.ecy.wa.gov/pubs/0610062.pdf.

Washington State Department of Community Trade and Economic Development

The Department of Community Trade and Economic Development has four grant and loan programs that the City might be eligible for:

- Community Development Block Grants General Purpose Grant;
- Community Economic Revitalization Board Grant and Loan Program;
- Public Works Trust Fund Loan Program; and
- Drinking Water State Revolving Fund Loan Program.

Community Development Block Grants (CDBG) General Purpose Grants

CDBGs are made available to Washington State small cities, towns and counties in carrying out significant community and economic development projects that principally benefit low and moderate income persons. Eligible applicants are Washington State cities and towns with a population less than 50,000 and counties with a population less than 200,000 that are non-entitlement jurisdictions or are not participants in a HUD Urban County Entitlement Consortium. Eligible projects include public facilities for water, wastewater, storm sewer and streets. The application period is September through November annually.

Community Economic Revitalization Board (CERB)

CERB, a division of the Washington State Department of Community, Trade and Economic Development, primarily offers low cost loans; grants are made available only to the extent that a loan is not reasonably possible. The CERB targets public facility funding for economically disadvantaged communities, specifically for job creation and retention. Priority criteria include the unemployment rates, number of jobs created and/or retained, wage rates, projected private investment, and estimated state and local revenues generated by the project. Traditional construction projects are offered at a maximum dollar limit of $1 million per project. A local match of 25 percent is targeted.

Eligible applicants include cities, towns, port districts, special purpose districts, federally recognized Indian tribes and municipal corporations.

The CERB's policy is that all loans will be secured by a general obligation pledge of the taxing power of the borrowing entity. Terms do not exceed 20 years, including available payment deferral of interest and principal for up to 5 years. Interest rates match the most current rate of Washington State bonds (not to exceed 10 percent). Application deadlines are 45 days prior to a CERB meeting, which are scheduled 6 times per year.

For more information, see http://choosewashington.com/business/financing/revitalization/Pages/default.aspx

Public Works Trust Fund (PWTF)

Cities, towns, counties and special purpose districts are eligible to receive loans from the Public Works Board, a division of the Washington State Department of Community, Trade and Economic Development. Water, sewer, storm, roads, bridges and solid waste/recycling infrastructure projects are eligible and funds may be used for repair, replacement, rehabilitation, reconstruction and improvements including reasonable growth (generally the 20-year growth projection in the comprehensive plan).

PWTF loans are available at interest rates of 0.5 percent, 1 percent and 2 percent, with the lower interest rates given to applicants who pay a larger share of the total project costs. The loan applicant must provide a minimum local match of 5 percent towards the project cost to qualify for a 2 percent loan; 10 percent for a 1 percent loan; and 15 percent for a 0.5 percent loan. The useful life of the project determines the loan term up to a maximum of 20 years. Applications are accepted year-round.

For more information, see: http://www.pwb.wa.gov/

Drinking Water State Revolving Loan Program (DWSRL)

The DWSRL is jointly administered by the Public Works Board and the Department of Health. The program is intended to improve drinking water systems and protect public health for publicly and privately owned systems.

There is no match required, terms are not to exceed 20 years and project completion time is 36 months after loan execution. The loan limit is $3 million, with a loan fee of 1 percent, and interest rates range from 0 to 1.5 percent depending upon the number of households at or below the county's median income. Applications are accepted annually in May.

For more information, see: http://www.doh.wa.gov/ehp/dw/our_main_pages/dwsrf.htm

Bond Financing

General Obligation Bonds

General obligation (GO) bonds are secured by the full faith and credit of the issuing agency, committing all available tax and revenue resources to debt repayment. With this high level of commitment, GO bonds have relatively low interest rates and few financial restrictions. However, the authority to issue GO bonds is restricted in terms of the amount and use of the funds, as defined by the Washington State Constitution and statute. Specifically, the amount of debt that can be issued is linked to assessed valuation.

RCW 39.36.020 states:

> (ii) Counties, cities, and towns are limited to an indebtedness amount not exceeding one and one-half percent of the value of the taxable property in such counties, cities, or towns without the assent of three-fifths of the voters therein voting at an election held for that purpose.
>
> (b) In cases requiring such assent counties, cities, towns, and public hospital districts are limited to a total indebtedness of two and one-half percent of the value of the taxable property therein.

While bonding capacity can limit availability of GO bonds for utility purposes, these can sometimes play a valuable role in project financing. A rate savings may be realized through two avenues: 1) the lower interest rate and related bond costs; and 2) the extension of repayment obligation to all tax-paying properties (not just developed properties) through the authorization of an ad valorem property tax levy.

Revenue Bonds

Revenue bonds are commonly used to fund utility capital improvements. The debt is secured by the revenues of the issuing utility and the debt obligation does not extend to the utility's other revenue sources. With this limited commitment, revenue bonds typically bear higher interest rates than GO bonds and also require security conditions related to the maintenance of dedicated reserves (a bond reserve) and financial performance (added bond debt service coverage). The utility agrees to satisfy these requirements by ordinance as a condition of the bond sale.

Revenue bonds can be issued in Washington State without a public vote. There is no bonding limit, except perhaps the practical limit of the utility's ability to generate sufficient revenue to repay the debt and provide coverage. In some cases, poor credit might make issuing bonds problematic.

Funding Options Summary

An ideal funding strategy would include the use of grants and low cost loans when debt issuance is required. However, these resources are very limited and competitive in nature and do not provide a reliable source of funding for planning purposes (unless already approved). It is recommended that the City pursue these funding avenues but assume bond financing to meet needs above the utility's available cash resources. GO bonds may be useful for special circumstances; however, due to the bonding capacity, limits are most often reserved for other City (non-utility) purposes. Revenue bonds are a more secure financing mechanism for utility needs. The capital financing strategy developed to fund the CIP assumes the following funding priority.

- Accumulated capital cash reserves.
- Annual revenue collections from plant investment fees.
- Annual transfers of rate-funded capital or excess cash (above minimum balance targets) from operating accounts.
- Interest earnings on capital fund balances and other miscellaneous capital resources.
- Revenue bond financing.

FUNDING AND FINANCING THE CIP

The forecast of capital project funding incorporates the City's budgeted 2009 capital spending, the 2010 through 2030 CIP, and the cost of annual water main improvements that extend beyond the 20-year CIP. The City's budgeted 2009 capital costs total $3 million. The CIP identifies $6.1 million ($6.9 million inflated to year of construction) in capital projects over the 6-year period of 2010 through 2015 and $31.2 million ($61.5 million inflated) over the 20-year period of 2010 through 2030. Costs are stated in 2009 dollars and escalated to the year of planned spending at an annual inflation rate of 3.1 percent for the first 6-year period and 4 percent for the remaining study period.

The capital funding plan defines a strategy for funding the CIP, including an analysis of available resources from rate revenues, existing reserves, plant investment fees, debt financing and any special resources that may be readily available (e.g. grants, developer contributions, etc.). The funding plan impacts the financial plan through the use of debt financing (resulting in annual debt service) and any assumed rate revenues available for capital funding.

A summary of the 6-year and 20-year capital funding plan is shown in **Table 10-5**.

Table 10-5
Capital Funding Plan

CAPITAL FUNDING PLAN	Budget 2009	Six Year Forecast 2010	2011	2012	2013	2014	2015	Total 2010-2015	Total 2010-2030
Uses: Capital Projects	$3,028,855	$ 802,805	$ 903,163	$ 810,610	$1,513,671	$1,574,573	$1,241,459	$ 6,846,282	$61,504,630
Sources:									
Developer Funding	$ -	$ 63,578	$ 65,549	$ 67,581	$ 69,676	$ 71,836	$ 74,063	$ 412,285	$ 2,037,181
Capital Reserves	547,235	739,227	602,106	672,548	700,287	718,015	760,761	4,192,944	41,780,514
Debt Issuance [1]	2,481,620	-	235,507	70,481	743,707	784,722	406,636	2,241,052	17,686,935
Total Sources	$3,028,855	$ 802,805	$ 903,163	$ 810,610	$1,513,671	$1,574,573	$1,241,459	$ 6,846,282	$61,504,630

[1] 2009 borrowing is a secured PWTF loan for the Cedarhome Reservoir; all future borrowing is assumed to be revenue bond issuance.

The six-year CIP totals are projected to be 6 percent developer funded, 61 percent from capital reserves, and 33 percent debt financed. The 20-year CIP totals are projected to be 68 percent capital reserves and 29 percent debt financed.

REVENUE REQUIREMENTS FORECAST

The revenue requirement analysis forecasts the amount of annual revenue that needs to be generated by rates. The analysis incorporates operating revenues, O&M expenses, debt service payments, rate funded capital needs, and any other identified revenues or expenses related to utility operations, and determines the sufficiency of the current level of rates. Revenue needs are also impacted by debt covenants (typically applicable to revenue bonds) and specific fiscal policies and financial goals of the utility.

Typically, two revenue sufficiency criteria are tested to determine the annual revenue need: 1) cash needs must be met; and 2) debt coverage requirements must be realized. In order to operate successfully with respect to these goals, both tests of revenue sufficiency must be met.

Cash Test

The cash flow test identifies all known cash requirements for the utility in each year of the 2010 through 2015 planning period. Typically, these include O&M expenses, debt service payments, rate funded capital and any additions to specified reserve balances. The total annual cash needs of the utility are then compared to total operating revenues (under current rates) to forecast annual revenue surpluses or shortfalls.

Coverage Test

The coverage test is based on a commitment made by the City when issuing revenue bonds and some other forms of long-term debt. For purposes of this analysis, revenue bond debt is assumed for any needed debt issuance. As a security condition of issuance, the City is required per covenant to agree that the revenue bond debt would have a higher priority for payment (a senior lien) compared to most other

utility expenditures; the only outlays with a higher lien are O&M expenses. Debt service coverage is expressed as a multiplier of the annual revenue bond debt service payment. For example, a 1.0 coverage factor would imply no additional cushion is required. A 1.25 coverage factor means revenues must be sufficient to pay O&M expenses and annual revenue bond debt service payments, plus an additional 25 percent of annual revenue bond debt service payments. The excess cash flow derived from the added coverage, if any, can be used for any utility purpose, including funding capital projects. The City does not have any outstanding revenue bonds; future bonds assume a 1.25 coverage requirement.

In determining the annual revenue requirement, both the cash and coverage sufficiency tests must be met. The test with the greatest deficiency drives the level of deficiency in a given year.

Financial Forecast

The financial forecast is developed from the City's 2009 budget documents along with other key factors and assumptions, to develop a complete portrayal of the water utility's annual financial obligations. The following is a list of the key revenue and expense factors and assumptions used to develop the forecast.

- This financial plan assumes just over 2 percent annual growth to the customer base.
- Water rate revenues (based on 2009 rates) are forecasted incorporating annual customer growth.
- Interest earnings on cash balances are projected at 0.5 percent in 2009 and 2 percent in 2010, increasing to 3 percent for the remainder of the study period.
- The 2009 budget forms the baseline for operating costs with adjustments to personnel costs per City planning.
- O&M expenses are escalated from the 2009 budget at 3 percent per year for general cost inflation. State taxes are calculated based on prevailing tax rates.
- Existing debt service schedules were provided by the City and include five PWTF loans.
- System reinvestment funding is phased in over six years.

Although the capital funding plan is completed for the 20-year time horizon, the financial plan focuses on the 6-year planning period, 2010 through 2015. **Table 10-6** summarizes the forecasted financial performance and rate revenue requirements for 2010 through 2015 based on the above assumptions.

Table 10-6
Revenue Requirements Forecast 2010 through 2015

REVENUE REQUIREMENTS SUMMARY	Current 2009	Six Year Forecast 2010	2011	2012	2013	2014	2015
Revenues							
Rate Revenue (with existing rates)	$ 1,361,281	$ 1,390,217	$ 1,420,020	$ 1,450,718	$ 1,482,337	$ 1,514,904	$ 1,548,449
Cederhome PIF Revenue for Debt Service	-	76,965	76,965	76,965	76,965	76,965	76,965
Non-rate Revenue	43,114	52,838	56,696	53,956	54,920	57,940	61,525
Total Revenues	**$ 1,404,395**	**$ 1,520,019**	**$ 1,553,681**	**$ 1,581,639**	**$ 1,614,221**	**$ 1,649,809**	**$ 1,686,938**
Expenses							
Cash Operating Expenses	$ 1,115,093	$ 1,157,788	$ 1,257,103	$ 1,348,272	$ 1,396,405	$ 1,446,354	$ 1,498,192
Existing Debt Service	414,611	453,156	449,625	445,680	441,735	413,041	409,096
New Debt Service	-	24,816	175,475	180,168	242,168	307,660	340,967
Rate funded System Reinvestment	-	-	-	5,992	2,663	24,047	44,168
Total Expenses	**$ 1,529,704**	**$ 1,635,760**	**$ 1,882,202**	**$ 1,980,112**	**$ 2,082,972**	**$ 2,191,101**	**$ 2,292,423**
Annual Net Cash Flow at Current Rate Levels	**$ (125,309)**	**$ (115,740)**	**$ (328,521)**	**$ (398,473)**	**$ (468,750)**	**$ (541,293)**	**$ (605,485)**
Annual Rate Adjustment		**0.00%**	**13.00%**	**13.00%**	**4.00%**	**4.00%**	**4.00%**
Cumulative Rate Adjustment		**0.00%**	**13.00%**	**27.69%**	**32.80%**	**38.11%**	**43.63%**
Annual Net Cash Flow After Rate Adjustments	$ (125,309)	$ (115,740)	$ (153,202)	$ (16,971)	$ (7,029)	$ 6,996	$ 36,185
Use of Excess Reserves (Contribution to)	125,309	115,740	153,202	16,971	7,029	(6,996)	(36,185)
Net Resources to Requirements	**$ -**	**$ -**	**$ -**	**$ -**	**$ -**	**$ -**	**$ -**
Days of O&M [target between 60 and 90]	*200*	*156*	*99*	*88*	*83*	*82*	*88*

To meet the 2009 expenditure needs, the City implemented a 7percent rate increase and used available cash reserves to balance the budget. As shown in the table, additional rate increases will be needed to meet expenditures over the study period. The City will continue to use cash reserves in excess of minimum balance policy thresholds to mitigate rate increases over the study period and balance the budget in each year. The rate forecast indicates two years of 13 percent increases beginning in 2011, followed by three years of 4 percent increases.

With this rate strategy, the City will balance the budget and meet minimum balance thresholds in each year. Rate adjustments will generate positive annual cash flow by 2014, eliminating the need to supplement with cash reserves.

The City will continue to track revenue needs as results are updated during the comprehensive rate study planned for 2010.

EXISTING RATE STRUCTURE

The existing water rate structure consists of a fixed monthly charge and an incremental rate per 100 cubic feet (cf) above the water use allowance included in the fixed charge. The water rates vary by meter size, but do not differentiate by customer class. The City's 2009 water rates are found in **Table 10-7**.

Table 10-7
2009 Water Rate Structure

Meter Size (inches)	Base Monthly Charge	Quantity Allowed (100 cubic feet)	Rate Above Allowance (per 100 cubic feet)
3/4	$17.57	6	$2.31
1	$29.34	10	$2.31
1 - 1/2	$58.51	20	$2.31
2	$93.65	40	$2.31
3	$175.70	80	$2.31
4	$292.89	150	$2.31

Water rates with the forecasted increases are shown in **Table 10-8**.

Table 10-8
Projected Residential Rates and Sample Monthly Bill with Increases

	Current 2009	2010	2011	2012	2013	2014	2015
Monthly Fixed Charges							
Base Rate (3/4" meter)	$17.57	$17.57	$19.85	$22.44	$23.33	$24.27	$25.24
Monthly Volume Charges							
Above 600 cubic feet	$2.31	$2.31	$2.61	$2.95	$3.07	$3.19	$3.32
Sample Single Family Residential Billing							
Calculated monthly bill	$24.50	$24.50	$27.69	$31.28	$32.54	$33.84	$35.19
Assumes 900 cubic feet annual average monthly water use							
Across the Board Rate Increases							
% Rate Increase	n/a	0.0%	13.0%	13.0%	4.0%	4.0%	4.0%

To enhance conservation in the water rate structure, it is recommended that the City consider setting rates by class of customer, as usage patterns and appropriate rate structures vary between single family residential, commercial, irrigation and other classes of customers. Conservation could also be enhanced by introducing additional volume rate blocks that increase with the level of water used for residential customers, and seasonal volume rates for non-residential customers.

Affordability

A common affordability benchmark for utility rates is to test the monthly median income equivalent against the existing and projected monthly utility rates. If monthly bills are less than 1.5 percent of the median household income for the demographic area, they are generally considered affordable. The median household income for the City in the 2000 census was $44,512. Median income is forecasted to include 3 percent annual escalation. **Table 10-9** presents the single family residential monthly water bills

over the forecast period, tested against the 1.5 percent threshold. Based on this index, the projected rates remain within an affordable range.

Table 10-9
Affordability Test

	Current 2009	2010	2011	2012	2013	2014	2015
Annual Median Income	$58,078	$59,820	$61,615	$63,463	$65,367	$67,328	$69,348
1.5% Monthly	$72.60	$74.78	$77.02	$79.33	$81.71	$84.16	$86.69
Current and Projected bi-monthly bill *	$24.50	$24.50	$27.69	$31.28	$32.54	$33.84	$35.19

* Assumes 900 cubic feet annual average monthly water consumption

CONCLUSION

Based on the source data and assumptions used, the financial analysis indicates that the rate plan provided would be sufficient to fund utility operations and the CIP developed for this Comprehensive Water System Plan, while maintaining reasonably affordable rates.

The City plans to conduct a comprehensive water rate and charge study in early 2010. The objectives of the study are to finalize recommended fiscal policies, rate adjustment strategies and the proposed plant investment fee; perform a cost of service by customer class; and evaluate potential rate structure refinements.

APPENDIX A

RETAIL WATER SERVICE AREA AGREEMENT

AGREEMENT FOR ESTABLISHING WATER UTILITY SERVICE AREA BOUNDARIES

PREAMBLE

This Agreement for water utility service area boundaries identifies and establishes between the parties the external boundary of the service area for which the designated water purveyor has assumed direct retail water service responsibility. The responsibilities accepted by the water purveyor are outlined in the Snohomish County Coordinated Water System Plan (CWSP), and as defined by the adopted rules and regulations of the Department of Health (DOH). Except as specifically provided herein, this agreement does not give new authorities or responsibilities to any water purveyor or to Snohomish County or State regulatory agencies, but acknowledges the geographical area for these designated service responsibilities.

The terms used within this Agreement shall be as defined in the implementing regulations of Chapter 70.116 RCW, except as identified below.

1. Snohomish County Critical Water Supply Service Area Map shall mean the map incorporated into this Agreement as Attachment A for the retail service area, except as amended in accordance with the CWSP procedures and with the concurrence of the affected water purveyors.

2. Retail Service Area shall mean the designated geographical area in which a purveyor shall supply water either by direct connection, by a satellite system, or through interim service by an adjacent utility or Satellite System Management Agency under agreement with the designated utility.

3. Wholesale Service Area shall mean the designated geographical area in which a purveyor, a group of purveyors, or another organization provides water to other water purveyors on a wholesale basis. A wholesale water supplier shall not provide water to individual customers in another purveyor's retail service area except with the concurrence of the purveyor responsible for the geographical area in question.

4. Lead Agency for administering the Agreement For Establishing Water Utility Service Area Boundaries shall be the Snohomish County Planning Department, unless otherwise established by amendment to the CWSP.

The authority for this Agreement is granted by the Public Water System Coordination Act of 1977, Chapter 70.116 RCW.

TERMS OF AGREEMENT

WHEREAS, Such an Agreement is required in WAC 248-56-730, Service Area Agreements-Requirement, of the Public Water System Coordination Act; and

WHEREAS, Designation of retail water service areas, together with the cooperation of utilities, will help assure that time, effort, and money are best used by avoiding unnecessary duplication of service; and

WHEREAS, Definite future service areas will facilitate efficient planning for, and provision of, water system improvements within Snohomish County as growth occurs; and

WHEREAS, Responsibility for providing water service through ownership and/or management of water systems in a designated service area is vested in the designated utility; and

WHEREAS, Definite retail and wholesale service areas will help assure that water reserved for public water supply purposes within Snohomish County will be utilized in the future in an efficiently planned manner,

NOW, THEREFORE, the undersigned party, having entered into this Agreement by signature of its authorized representative, concurs with and will abide by the following provisions:

Section 1. Service Area Boundaries. The undersigned party acknowledges that the Snohomish County Critical Water Supply Service Area Map, included as Attachment A to this Agreement and as may be subsequently updated, identifies the utility's future water service area. The undersigned further acknowledges that there are no service area conflicts with adjacent water utilities, or, where such conflicts exist, agrees that no new water service will be extended within disputed areas until such conflicts are resolved.

Section 2. Common Service Area Transfer. It is understood that utilities may initially continue existing water service within the boundaries of neighboring utilities, as defined in Attachment A. Such common service areas, if they exist, are described in Attachment B to this agreement. Also included in Attachment B are copies of, or a list of, all resolutions, ordinances, or agreements permitting these uncontested overlays. The undersigned party agrees that any water line for retail service extending outside of the retail service area boundary, as set forth in Attachment A, shall be phased out and service transferred to the designated adjacent utility on an economic basis or by mutual agreement.

Economic basis considerations may include, but are not limited to:

(a) A determination by the present owner of service lines that maintenance, repair, and/or replacement costs exceed attributable income.

(b) Planned or imminent major street improvements or major improvements to either or both water systems which include an opportunity to transfer service.

The terms of the transfer of service area described in this Section shall be established in a separate agreement among the adjacent utilities whose boundaries are affected.

Section 3. Boundary Streets. Unless separate agreements exist with adjacent utilities concerning water services or other utility services, this party agrees that the water utility which is located to the north or east of boundary streets between this party and adjacent utilities will be entitled to provide future water service on both sides of those streets. Depth of service on boundary streets shall be limited to one platted lot or as otherwise agreed by the utilities. Existing services on boundary streets shall remain as connected unless transfer of service is agreed to by both parties, as per Section 2. These provisions do not disallow the placement of mains in the same street by adjacent utilities where geographic or economic constraints require such placement for the hydraulic benefit of both utilities.

Section 4. Boundary Adjustments. If, at some time in the future it is deemed appropriate by the undersigned party to make service area boundary adjustments, such modifications must receive written concurrence (which shall not be unreasonably withheld) of all utilities that would be directly affected by such a boundary adjustment and the legislative authority(ies) having jurisdiction. These written modifications must be noted and filed with the designated Snohomish County lead agency and DOH. It is understood by the undersigned party that if, as provided by RCW 70.116.040, it is unable to provide service within its designated service area boundary it may decline to do so. But, in that case, an applicant may be referred to other adjacent utilities, to a pre-qualified Satellite System Management Agency (SSMA), or a new utility may be created and the original service area boundary will be adjusted accordingly. This provision does not apply where boundary adjustments are made as a result of municipal annexations or incorporations, nor is it intended to modify the provisions of state law.

Section 5. Service Extension Policies. The undersigned party agrees that prior to expanding its water service area, other than by addition of retail customers to existing water mains, or to serve in the capacity of a pre-qualified SSMA, it shall

have adopted design standards and Utility Service extension policies. The design standards shall meet or exceed the Snohomish County Minimum Design Standards.

Municipalities further agree that if an individual municipality identifies a service area outside of their existing municipal corporate boundaries, said municipality will assume full responsibility for providing water service equivalent to (excluding rates and charges) the level of service provided for their inside-city customers. This will be in conformance with applicable land use policies.

Section 6. Systems Placed in Receivership. Legislation passed in the 1990 Regular Session of the Washington State Legislature (Substitute Senate Bill 6447) provides that whenever an action is brought in superior court to place a public water system in receivership, the petition to the court shall name candidates for receiver who have consented to assume operation of the water system. The undersigned party agrees to be named as receiver in such actions initiated for systems within its designated service area. By this consent, the undersigned does not waive its rights to appear and participate in the court proceedings to determine acceptable conditions of receivership.

This agreement by reference includes the following attachments:

Attachment A - Snohomish County Critical Water Supply Service Area Map. (see Section 1)

Attachment B - Common Service Area Agreement - Optional - Utility may attach copies or list such agreements if relevant. (see Section 2)

IN WITNESS WHEREOF, the undersigned party has executed this Agreement as of March 18,1991.

City of Stanwood
Water Utility

Representative

Mayor
Title

Receipt Acknowledged:

Snohomish County
Planning Department

Date

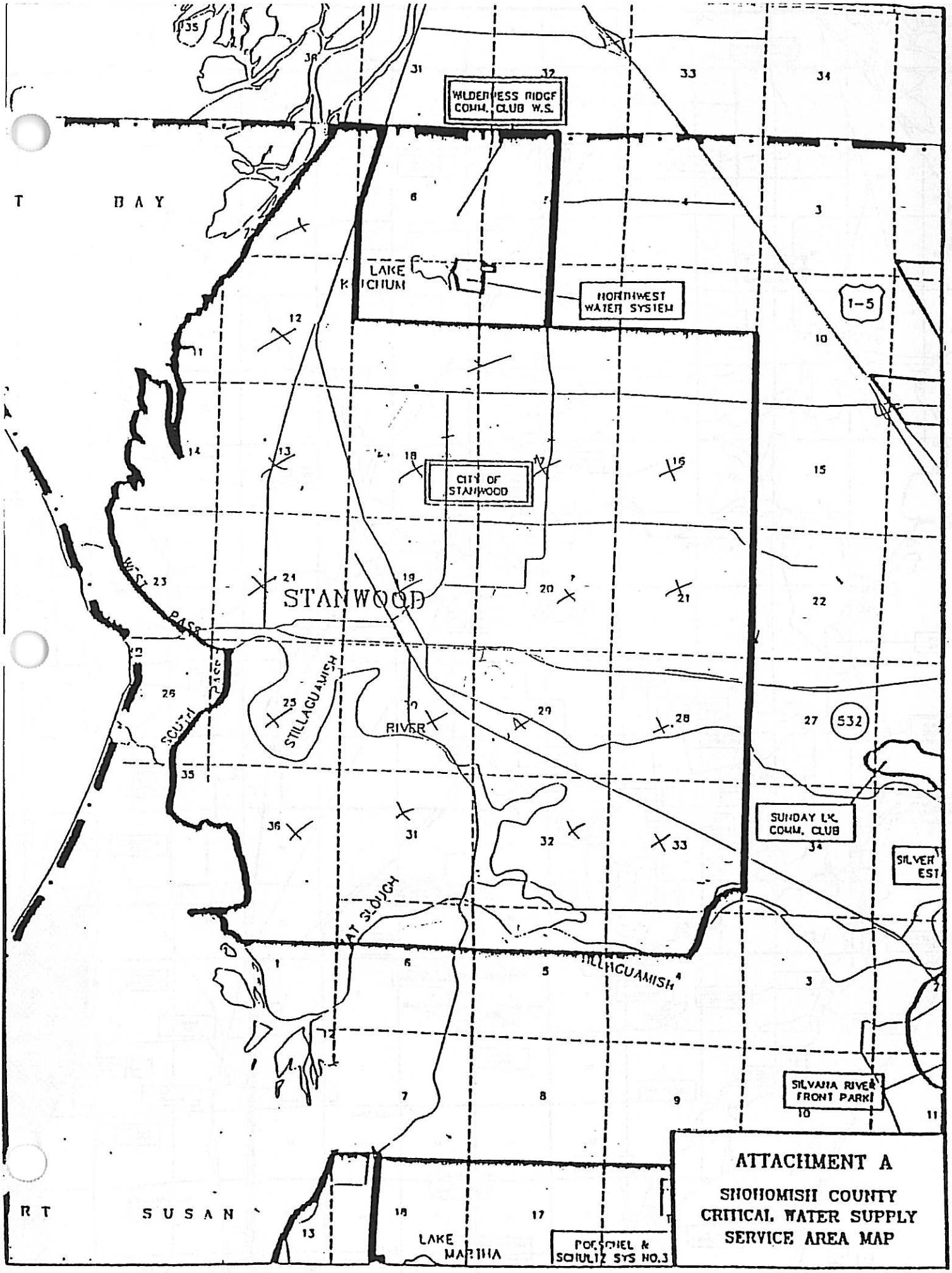

ATTACHMENT A

SNOHOMISH COUNTY CRITICAL WATER SUPPLY SERVICE AREA MAP

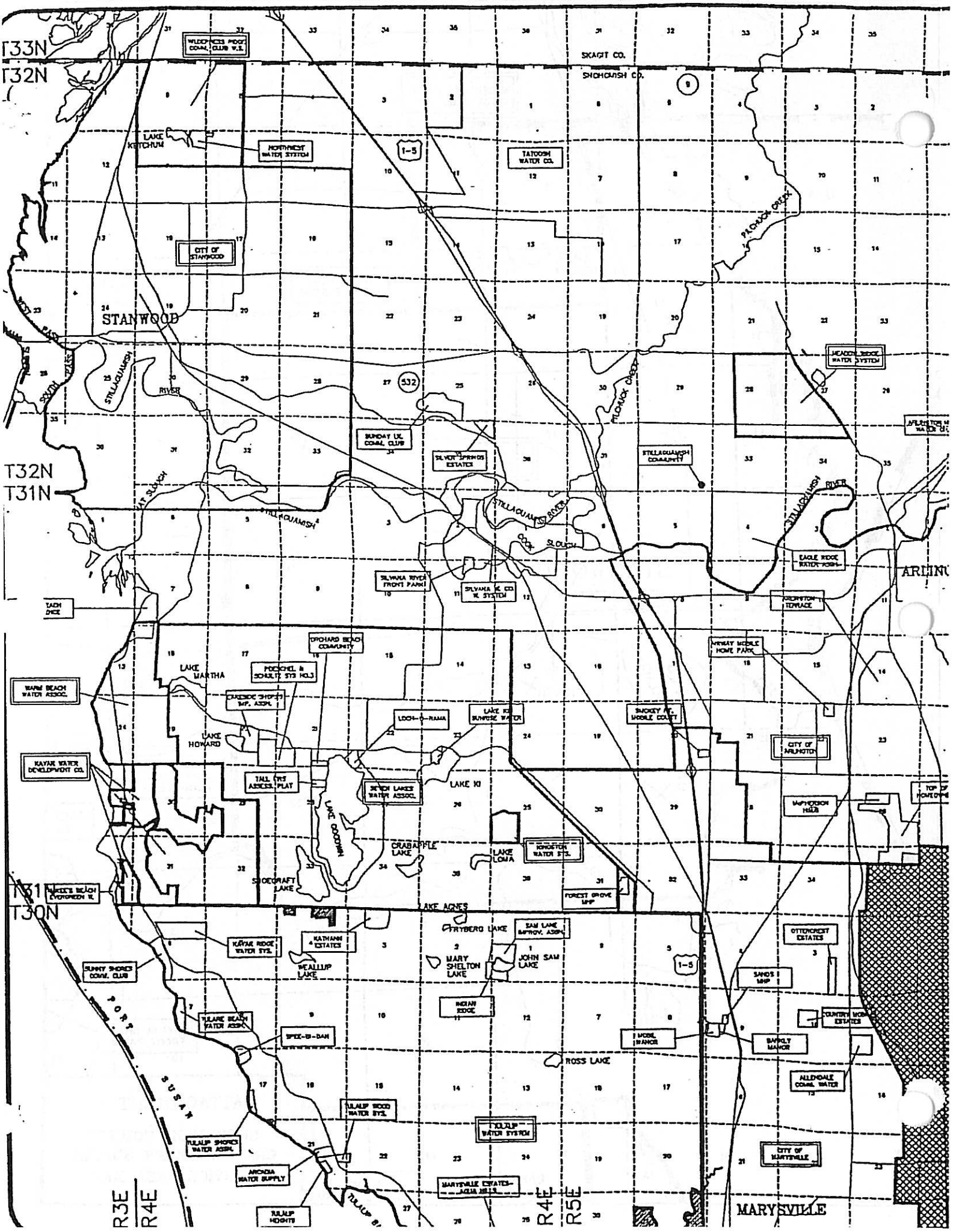
T33N
T32N
T32N
T31N
T31
T30N
R3E
R4E
R4E
R5E
SKAGIT CO.
SNOHOMISH CO.
LAKE KETCHUM
NORTHWEST WATER SYSTEM
I-5
TATOOSH WATER CO.
CITY OF STANWOOD
STANWOOD
STILLAGUAMISH RIVER
PILCHUCK CREEK
532
SUNDAY LK. COMM. CLUB
SILVER SPRINGS ESTATES
STILLAGUAMISH COMMUNITY
STILLAGUAMISH RIVER
COOK SLOUGH
SILVANA RIVER FRONT PARK
SILVANA W. CO. W. SYSTEM
EAGLE RIDGE WATER ASSN.
ARLINGTON TERRACE
ARLINGTON
ORCHARD BEACH COMMUNITY
LAKE MARTHA
POESCHEL & SCHULTZ SYS NO.3
WARM BEACH WATER ASSOC.
LAKEWOOD SHORES IMP. ASSN.
LOCH-O-MANA
LAKE KI SUNRISE WATER
SMOKEY PT. MOBILE COURT
CITY OF ARLINGTON
LAKE HOWARD
KAYAK WATER DEVELOPMENT CO.
TALL TYS ADDES. PLAT
SEVEN LAKES WATER ASSOC.
LAKE KI
LAKE GOODWIN
CRABAPPLE LAKE
LAKE LOMA
KINGSTON WATER SYS.
SHOEGRAFT LAKE
FOREST GROVE MHP
LAKE AGNES
FRYBERG LAKE
SAM LAKE IMPROV. ASSN.
KAYAK RIDGE WATER SYS.
KATHANN ESTATES
MEALLUP LAKE
MARY SHELTON LAKE
JOHN SAM LAKE
OTTOWOMEET ESTATES
SUNNY SHORES COMM. CLUB
SANDS MHP
INDIAN RIDGE
TULARE BEACH WATER ASSN.
SPEE-B-DAN
COUNTRY HOMES ESTATES
MOBIL MANOR
BARTLT MANOR
ROSS LAKE
ALLENDALE COMM. WATER
PORT SUSAN
TULALIP WOOD WATER SYS.
TULALIP WATER SYSTEM
TULALIP SHORES WATER ASSN.
CITY OF MARYSVILLE
ARCADIA WATER SUPPLY
MARYSVILLE ESTATES-AQUA MHP
TULALIP HEIGHTS
MARYSVILLE

APPENDIX B

WATER SYSTEM FACILITIES DATA

City of Stanwood
Comprehensive Water System Plan
Storage Facilities Data

Reservoir Data

Reservoir Name	Pressure Zone	Year Const.	Material	Capacity (gallons)	Overall Height (feet)	Diameter (feet)	Water Base Elv (feet)	Overflow Elv (feet)	Ground Elv (feet)	Seismic Restraint (Y or N)
Knittle #1	297	1990	Concrete	200,000	50	26	247.0	297.0	247	Yes
Knittle #2	297	1997	Steel	1,000,000	48	61	249.0	297.0	249	Yes
Cedarhome	365	2009	Composite	550,000	35.5	53.33	329.5	365.0	250	Yes
Bailey #1	125	1989	Concrete	200,000	21	45	108.0	125.0	108	Yes
Bailey #2	125	1989	Concrete	200,000	21	45	108.0	125.0	108	Yes

Storage Data

Reservoir Name	Max Water Height (feet)	Volume Per Foot (gallons)
Knittle #1	50.0	4,000
Knittle #2	48.0	20,833
Cedarhome	35.5	15,493
Bailey #1	17.0	11,765
Bailey #2	17.0	11,765

Level Control Data

Reservoir Name	Controlled Supply Facility	Reservoir Have Telemetry
Knittle #1	None	No
Knittle #2	None	No
Cedarhome	Cedarhome BPS	Yes
Bailey #1	Bryant & Cedarhome Wells	Yes
Bailey #2	Bryant & Cedarhome Wells	Yes

City of Stanwood
Comprehensive Water System Plan
Pressure Reducing Station Data

Station Data

PRV Name	Upper Pressure Zone	Lower Pressure Zone	Year Const.	Ground Elv (feet)	Normal Pressure Inlet (psi)	Normal Pressure Outlet (psi)	Station Operation Status
276th St & 80th Dr	297	265	1992	140	62	45	Active
272nd & 81st	297	242	1992	115	87	45	Active
280th & 83rd	297	255	1992	160	52	38	Active
288th & 89th	297	252	1992	125	80	45	Active
282nd & Nordic Wy	297	255	1999	111	72	72	Active
SR 532 & Pioneer Hwy	297	125	1997	36	111	38	Active
Copper Station	365	297	2007	200	92	52	Active
277th & 71st	365	297	2004	200	89	44	Active
281st & 70th	365	297	2004	185	91	55	Active
278th & 78th	365	297	2004	200	89	45	Active

PRV Set Point Data

PRV Name	Description	Valve Size (inches)	Valve Mfgr	Valve Model	Valve Elv (feet)	Valve Set Point (psi)	Valve Set Point (feet H.E.)
276th St & 80th Dr	Small PRV	2	Cla-Val	90G-01AS	135	45	239
	Large PRV	4	Cla-Val	90G-01AB	135	40	227
272nd & 81st	PRV	2	Cla-Val	90G-01AS	110	45	214
280th & 83rd	Small PRV	2	Cla-Val	90G-01AS	155	38	243
	Large PRV	4	Cla-Val	90G-01AB	155	38	243
288th & 89th	PRV	2	Cla-Val	90G-01AS	120	45	224
282nd & Nordic Wy	Small PRV	3	Cla-Val	90G-01AS	106	56	235
	Large PRV	6	Cla-Val	90G-05ABS	106	44	208
SR 532 & Pioneer Hwy	Small PRV	3	Cla-Val	90G-01AS	31	38	119
	Large PRV	8	Cla-Val	90G-05ABS	31	35	112
Copper Station	Small PRV	3	Cla-Val	90G-01BCSY	195	35	276
	Large PRV	8	Cla-Val	90G-01BCSY	195	30	264
277th & 71st	Small PRV	2	Cla-Val	90G-01BCSYKC	195	44	297
	Large PRV	6	Cla-Val	90G-01BCSYKC	195	39	285
	Backpressure sustaining	3	Cla-Val	50A-01BKC	195	60	334
281st & 70th	Small PRV	2	Cla-Val	90G-01BCSY	180	45	284
	Large PRV	6	Cla-Val	90G-01BCSY	180	40	272
278th & 78th	Small PRV	2	Cla-Val	90G-01BCSY	195	43	294
	Large PRV	6	Cla-Val	90G-01BCSY	195	39	285

* Valve setpoint data based on MacNeill Control Valve Solutions 2009 valve maintenance report.

City of Stanwood
Comprehensive Water System Plan
Well Facilities Data

Well Data

Well Name	Pressure Zone	Year Const.	Current Pumping Rate (gpm)	Max. Well Capacity (gpm)	Max Inst Water Right (gpm)	Casing Size (inches)	Well Depth (feet)	Well Screen Depth (feet)	Pump Intake Depth (feet)	Static Water Depth (feet)	Pumping Water Depth (feet)	Ground Elv (feet)
Bryant Well #1	125	1948	1350	1350	2000	12	250	50 - 245	129	83.5	88.5	61.5
Bryant Well #2	125	1966	350	350	*	12	200	168 - 200	128	81	86	62.9
Fure Well	297	1951	100	100	150	12	157	145 - 150	150			105
Hatt Slough Springs	125	1934	350	350	1125	n/a	n/a	n/a			n/a	
Cedarhome Well	297	2008	600	700	500	12 & 16	490	365-480		130	154	137
Sill Well	297	1958	600	600	600		235	197 - 235				135
					4375							

* Shares water right with Bryant Well #1

Well Pump Data

Pump Name	Pump Manufacturer	Pump Model	Pump Type	Design Capacity (gpm)	Design Head (feet)	Motor Mfgr	Motor Size (HP)	Control Valve Size & Model	Have Standby Power	Have E.G. Set Receptacle
Bryant Well #1	Peerless	12MA	Turbine	1000	255	GE	75	8" (CV), Chapman	No	No
Bryant Well #2	Worthington	10HH-110-7	Turbine	1000	231		75	4" (FCV), Cla-Val	No	No
Fure Well	Jacuzzi	S6B/15S675-15	Submersible	100	300	Franklin	15	3" (CV)	No	No
Hatt Slough Springs (Pump1)	Worthington	158029 2DN	Centrifugal	115	158	Industrial Elec.	10	6" (CV), MHV&F Co.	No	No
Hatt Slough Springs (Pump2)	Worthington	158029 2DN	Centrifugal	115	158	Master Elec.	10	6" (CV), MHV&F Co.	No	No
Hatt Slough Springs (Pump3)	Worthington	158029 2DN	Centrifugal	115	158	Industrial Elec.	10	6" (CV), MHV&F Co.	No	No
Cedarhome Well				500						
Sill Well	WELL ABANDONED AND OUT OF SERVICE/NO POWER/NO SYSTEM CONNECTION								No	No

Well Pump Curve Data

Well Name	Point 1		Point 2		Point 3		Pump Serial Number	Pump Impeller Diameter
	Flow (gpm)	Head (feet)	Flow (gpm)	Head (feet)	Flow (gpm)	Head (feet)		
Bryant Well #1	600	305	1000	255	1400	150	47748	8.6875"
Bryant Well #2	600	280	1000	231	1400	126	16832	6.4375"
Fure Well	50	740	80	540	100	340	9262-2711	
Hatt Slough Springs (Pump1)	80	165	160	150	240	110	XM1730	6.38"
Hatt Slough Springs (Pump2)	80	165	160	150	240	110	XK1596	6.38"
Hatt Slough Springs (Pump3)	80	165	160	150	240	110	XK1610	6.38"
Cedarhome Well								
Sill Well	OUT OF SERVICE/NO POWER/NO SYSTEM CONNECTION							

Control Data

Well Name	Control Facility	Supplied Pressure Zone	Supply To Zone Priority	Well Have Telemetry
Bryant Well #1	Knittle Reservoir Level	297	Primary Supply	Yes
Bryant Well #2	Knittle Reservoir Level	297	Backup Supply	Yes
Fure Well	Continuous	297	Backup Supply	No
Hatt Slough Springs	Continuous	125	Primary Supply	No
Cedarhome Well	Knittle Reservoir Level	297	Primary Supply	Yes
Sill Well	OUT OF SERVICE	297	OUT OF SERVICE	No

City of Stanwood
Comprehensive Water System Plan
Pump Station Facilities Data

Pump Station Data

Name	Suction Pressure Zone	Discharge Pressure Zone	Year Const.	Above or Below Grade	Maximum Capacity (gpm)	Meter Size & Model	Have Standby Power	Have E.G. Set Receptacle	Have Surge Protection
Bailey	125	297	Pre 1969	Above	800	None	No	No	No
Cedarhome	297	365	2006	Above	1000		No	No	No
Knittle	297	365	1998	Above	1360	3"	No	Yes	No

Pump Data

Pump Name	Pump Manufacturer	Pump Model	Pump Type	Current Pump Rate (gpm)	Design Capacity (gpm)	Design Head (feet)	Motor Mfgr	Motor Size (HP)	Control Valve Size & Model
Bailey - Pump 1	Jacuzzi	DC2	Centrifugal	200	200	190	US Motors	15	2 (CV)
Bailey - Pump 2	Goulds	3656S	Centrifugal	200	200	182	Baldor	15	2 (CV)
Bailey - Pump 3	Jacuzzi	DC2	Centrifugal	200	200	190	Baldor	15	2 (CV)
Bailey - Pump 4	Goulds	3656	Centrifugal	200	200	190	Baldor	15	2 (CV)
Cedarhome - Pump 1			Centrifugal		500			20	
Cedarhome - Pump 2			Centrifugal		500			20	
Cedarhome - Pump 3			Centrifugal		500			20	
Knittle - Pump 1	Paco	1070-7	Centrifugal	15	15	110	Baldor	3	1.5 (CV)
Knittle - Pump 2	Paco	1270-9	Centrifugal	85	85	110	Baldor	5	3 (WCV)
Knittle - Pump 3	Paco	1270-9	Centrifugal	85	85	110	Baldor	5	3 (WCV)
Knittle - Pump 4	Paco	5012-3	Centrifugal	1175	1175	110	US Motors	50	10 (WCV)

Pump Curve Data

Pump Name	Point 1		Point 2		Point 3		Pump Serial Number	Pump Impeller Diameter
	Flow (gpm)	Head (feet)	Flow (gpm)	Head (feet)	Flow (gpm)	Head (feet)		
Bailey - Pump 1	100	215	200	190	300	140	7F8PTL34	7.5
Bailey - Pump 2	80	216	160	200	240	156	F890	7.25
Bailey - Pump 3	100	215	200	190	300	140	F893/93127413R193	7.5
Bailey - Pump 4	80	216	160	200	240	156	213-215JH	6.75
Cedarhome - Pump 1								
Cedarhome - Pump 2								
Cedarhome - Pump 3								
Knittle - Pump 1	5	112	40	105	80	90	97RR207102	5.4
Knittle - Pump 2	20	122	85	110	150	55	97RR207101-A	5.16
Knittle - Pump 3	20	122	85	110	150	55	97RR207101-B	5.16
Knittle - Pump 4	600	132	1175	110	1700	60	97RR207103	11.55

Pump Control Data

Pump Name	Control Facility	Supplied Pressure Zone	Supply To Zone Priority	Pump Operation Priority	Station Have Telemetry
Bailey - Pump 1	Hand & Clock	297	Primary Supply	Primary	No
Bailey - Pump 2	Hand & Clock	297	Primary Supply	1st Lag	No
Bailey - Pump 3	Hand & Clock	297	Primary Supply	2nd Lag	No
Bailey - Pump 4	Hand & Clock	297	Primary Supply	3rd Lag	No
Cedarhome - Pump 1	Pressure Switch	365	Only Supply	Primary	No
Cedarhome - Pump 3	Pressure Switch	365	Only Supply	1st Lag	No
Knittle - Pump 1	365 Zone Pressure	365	Only Supply	Primary	No
Knittle - Pump 2	365 Zone Pressure	365	Only Supply	1st Lag	No
Knittle - Pump 3	365 Zone Pressure	365	Only Supply	2nd Lag	No
Knittle - Pump 4	365 Zone Pressure	365	Only Supply	Fire Flow	No

City of Stanwood
Comprehensive Water System Plan
Check Valve and Zone Valve Data

Check Valves

Location	Low Pressure Zone	High Pressure Zone	Hydraulic Model Pipe No.	Year Const.	Valve Size	Valve Type
276th & 74th St	297	400	617	1999	8	
Cedarhome Rd (near BPS)	297	350	359	1973	6	

Zone Valves

Location	Low Pressure Zone	High Pressure Zone	Hydraulic Model Pipe No.	Valve Size
Pioneer Hwy & Cedarhome Dr N	125	252	614	8
276th & 74th St	297	400	866	8
274th St NW becomes Cedarhome Rd	265	297	927	2
83rd Dr NW & 272nd St NW	265	29*=7	616	6

*Total of 13 normally closed valves, only 4 are zone valves.

APPENDIX C

WATER FACILITIES INVENTORY (WFI) FORM

Washington State Department of **Health**
Division of Environmental Health
Office of Drinking Water

ONE FORM PER SYSTEM

OCT 1 2 2009
CITY OF STANWOOD

Updated: 01/29/2009
Printed: 10/01/2009
WFI Printed For: Annual
Submission Reason: Treatment Update

RETURN TO: Northwest Regional Office, 20435 72nd Ave S STE 200, Kent, WA, 98032

1. SYSTEM ID NO.	2. SYSTEM NAME	3. COUNTY	4. GROUP	5. TYPE
57650 FI	STANWOOD WATER DEPT, CITY OF	SNOHOMISH	A	COMM

6. PRIMARY CONTACT NAME & MAILING ADDRESS

KEVIN J. HUSHAGEN [MANAGER]
10220 270TH ST NW
STANWOOD, WA 98292

7. OWNER NAME & MAILING ADDRESS — **8. OWNER NUMBER, TITLE**

STANWOOD, CITY OF
ANDREW BULLINGTON
10220 270TH ST NW
STANWOOD, WA 98292

TITLE: OWNER CONTACT

STREET ADDRESS IF DIFFERENT FROM ABOVE

ATTN
ADDRESS
CITY STATE ZIP

STREET ADDRESS IF DIFFERENT FROM ABOVE

ATTN
ADDRESS
CITY STATE ZIP

9. 24 HOUR PRIMARY CONTACT INFORMATION		10. OWNER CONTACT INFORMATION	
Primary Contact Daytime Phone:	(360) 629-9782	Owner Daytime Phone:	(360) 629-5323
Primary Contact Mobile/Cell Phone:	(425) 754-4880	Owner Mobile/Cell Phone:	(425) 508-3125
Primary Contact Evening Phone:	(425) 754-4880	Owner Evening Phone:	(425) 504-3125
Fax: (360) 629-0867	E-mail: kevin@ci.stanwood.wa.us	Fax: (360) 629-0867	E-mail: andrew.bullington@ci.stanwood.wa.us

WAC 246-290-420(9) requires that water systems provide 24-hour contact information for emergencies.

11. SATELLITE MANAGEMENT AGENCY - SMA (check only one)

- ☒ Not applicable (Skip to #12)
- ☐ Owned and Managed
- ☐ Managed Only
- ☐ Owned Only

SMA NAME: _____ SMA NUMBER

12. WATER SYSTEM CHARACTERISTICS (mark ALL that apply)

☒ Agricultural	☐ Hospital/Clinic	☒ Residential
☒ Commercial / Business	☐ Industrial	☒ School
☒ Day Care	☒ Licensed Residential Facility	☐ Temporary Farm Worker
☒ Food Service/Food Permit	☐ Lodging	☒ Other (church, fire station, etc.):
☐ 1,000 or more person event for 2 or more days per year	☒ Recreational / RV Park	

13. WATER SYSTEM OWNERSHIP (mark only one)

☐ Association	☐ County	☐ Investor	☐ Special District
☒ City / Town	☐ Federal	☐ Private	☐ State

14. STORAGE CAPACITY (gallons)

1,600,000

--- SEE NEXT PAGE FOR A COMPLETE LIST OF SOURCES ---

WATER FACILITIES INVENTORY (WFI) FORM - Continued

1. SYSTEM ID NO.	2. SYSTEM NAME	3. COUNTY	4. GROUP	5. TYPE
53050	STANWOOD WATER DEPT, CITY OF	SNOHOMISH	A	Public

	ACTIVE SERVICE CONNECTIONS	DORMANT CONNECTIONS (Not Active)	CONNECTIONS APPROVED (Not Built)
25. SINGLE FAMILY RESIDENCES (How many of the following do you have?)	0	2150	
A. Full Time Single Family Residences (Occupied 180 days or *more* per year)	1900		
B. Part Time Single Family Residences (Occupied *less than* 180 days per year)	50		
26. MULTI-FAMILY RESIDENTIAL BUILDINGS (How many of the following do you have?)			
A. Apartment Buildings, condos, duplexes, barracks, dorms	0		
B. Full Time Residential Units in the Apartments, Condos, Duplexes, Dorms that are occupied *more than* 180 days/year	200		
C. Part Time Residential Units in the Apartments, Condos, Duplexes, Dorms that are occupied *less than* 180 days/year	0		
27. NON-RESIDENTIAL CONNECTIONS (How many of the following do you have?)			
A. Recreational Services and/or Transient Accommodations (Campsites, RV sites, hotel/motel/overnight units)	2	2	
B. Institutional, Commercial/Business, School, Day Care, Industrial Services, etc.	375	31	
28. TOTAL SERVICE CONNECTIONS	2327	2183	

29. FULL TIME RESIDENTIAL POPULATION

A. How many residents are served by this system 180 or *more* days per year? 5750

30. PART TIME RESIDENTIAL POPULATION	JAN	FEB	MAR	APR	MAY	JUN	JUL	AUG	SEP	OCT	NOV	DEC
A. How many part-time residents are present each month?												
B. How many days per month are they present?												

31. TEMPORARY & TRANSIENT USERS	JAN	FEB	MAR	APR	MAY	JUN	JUL	AUG	SEP	OCT	NOV	DEC
A. How many total visitors, attendees, travelers, campers, patients or customers have access to the water system each month?												
B. How many days per month is water accessible to the public?												

32. REGULAR NON-RESIDENTIAL USERS	JAN	FEB	MAR	APR	MAY	JUN	JUL	AUG	SEP	OCT	NOV	DEC
A. If you have schools, daycares, or businesses connected to your water system, how many students daycare children and/or employees are present each month?												
B. How many days per month are they present?												

33. ROUTINE COLIFORM SCHEDULE	JAN	FEB	MAR	APR	MAY	JUN	JUL	AUG	SEP	OCT	NOV	DEC
	6	6	6	6	6	6	6	6	6	6	6	6

35. Reason for Submitting WFI

☐ Update - Change ☐ Update - No Change ☐ Inactivate ☐ Re-Activate ☐ Name Change ☐ New System ☐ Other _____

36. I certify that the information stated on this WFI form is correct to the best of my knowledge.

SIGNATURE: _____ **DATE:** _____

PRINT NAME: _____ **TITLE:** _____

WATER FACILITIES INVENTORY (WFI) FORM - Continued

1. SYSTEM ID NO.	2. SYSTEM NAME	3. COUNTY	4. GROUP	5. TYPE
69750 H	STANWOOD WATER DEPT, CITY OF	SNOHOMISH	A	Origin

15	16	17	18										19			20	21						22	23	24				
	SOURCE NAME	INTERTIE	SOURCE CATEGORY										USE				TREATMENT												
SOURCE NUMBER	LIST UTILITY'S NAME FOR SOURCE AND WELL TAG ID NUMBER Example: WELL #1 AX7456 IF SOURCE IS PURCHASED OR INTERTIED LIST SELLER'S NAME Example: SEATTLE	INTERTIE SYSTEM ID NUMBER	WELL	WELL FIELD	WELL COVE FIELD	SPRING	SPRING FIELD	SPRINGS SPRINGFIELD	SEAWATER	SURFACE WATER	RAINWATER GALLERY	OTHER	PERMANENT	SEASONAL	EMERGENCY	SOURCE METERED	NONE	CHLORINATION	FILTRATION	FLUORIDATION	IRRADIATION (UV)	OTHER	DEPTH TO TOP OF OPEN INTERVAL IN FEET	CAPACITY GALLONS PER MINUTE	1/4 1/4 SECTION	SECTION NUMBER	TOWNSHIP	RANGE
01	HATT SLOUGH SPRINGS					X							X			Y		X						350	SE NW	05	31N	04E
02	AGB783 BRYANT 1		X										X			Y		X	X			X	50	1000	NW NE	29	32N	04E
03	AGB784 BRYANT 2		X												X	Y	X						170	1250	NW NE	29	32N	04E
04	AGB785 FURE WELL		X												X	Y	X						150	100	NW SE	20	32N	04E
05	AGB786 SILL WELL		X												X		X						231	600	SE NE	20	32N	04E
06	InAct 09/23/2004 BRYANT #1 & #2			X									X			Y	X						50	2250	NW NE	29	32N	04E
07	Cedarhome Well (PW-4)		X										X			Y		X					365	500	SW NE	20	32N	04E

APPENDIX D

CONSISTENCY STATEMENT CHECKLIST

Washington State Department of Health
Division of Environmental Health
Office of Drinking Water

Local Government Consistency Review Checklist

A consistency review between DOH planning and engineering documents and adopted comprehensive plans and development regulations is required in certain situations. This checklist may be used to document the consistency review as required in WAC 246-290-108. A consistency review is required for each local government with jurisdiction over the applicable service area.

Water System Name: City of Stanwood PWS ID: 83650

Planning Document Title: Comprehensive Water System Plan Plan Date: November 2009

Local Government with Jurisdiction: City of Stanwood

Consistency Statement	Page(s) in Planning Document	Yes – No – Not Applicable
The applicable service area is consistent with the land use and zoning in the adopted comprehensive plan and adopted development regulations.	Figs. 2-3 & 3-1	yes
For Water System Plans: The six-year growth projection used to forecast water demand is consistent with the adopted city/county's population growth projections. If a different growth projection was used, the alternative growth projection and methodology proposed is acceptable based on explanation given.	Pages 3-4 to 3-7	yes
For Water System Plans: Provisions of water service for new service connections are consistent with the adopted comprehensive plan and adopted development regulations.	Pages 5-3 to 5-4, App. H & N	yes
For city-owned systems only: All utility service extension ordinances regarding water service are included in the plan. These policies are consistent with the adopted comprehensive plan and adopted development regulations.	App. N	yes
Other relevant elements related to water supply (as determined by DOH) is consistent with the adopted comprehensive plan and adopted development regulations.	Chapters 5, 6, & 7	N/A
Where the local government with jurisdiction did not provide a Consistency Review: Provide documentation of efforts taken and amount of time provided. Include: name of contact, date, type of effort attempted, and response from local agency.		N/A

I certify that the above statements are true to the best of my knowledge and that these statements support the conclusion that the subject-planning document is consistent with adopted comprehensive plans, development regulations, and other policies.

Rebecca Lind 11/2/09

Signature Date

Rebecca Lind Community Development Director City of Stanwood

Printed Name, Title, & Jurisdiction

****For any issues of inconsistency, please document the inconsistency, including the citation from the comprehensive plan or development regulation. Provide direction on how this inconsistency can be resolved.****

APPENDIX E

SEPA CHECKLIST

CITY OF STANWOOD
DETERMINATION OF NONSIGNIFICANCE

Project: City of Stanwood 2009 Comprehensive Water System Plan
File Number: LSDV09-4
Proponent: City of Stanwood
Date of Issuance: October 16, 2009
Lead Agency: City of Stanwood

DESCRIPTION OF PROPOSALS:

Project Description: The City's Water Service Plan (WSP) proposes various improvements that are necessary to resolve existing system deficiencies and plan for the projected growth of water system customers. The WSP details the service area, existing facilities and water use, as well as the construction, operation and maintenance requirements for the water system. The WSP proposes projects that will rehabilitate and replace aging water main and facilities, as well as construct new facilities to accommodate future growth. The WSP Capital Improvement Program recommends a schedule for construction of various specific improvements to the water system between 2010 and 2015. General strategies are identified beyond 2015. The WSP is applicable to the water service area within incorporated Stanwood and unincorporated Snohomish County defined as part of the North Snohomish County Coordinated Water System Plan.

THRESHOLD DETERMINATION:

The lead agency for this proposal has determined that it does not have a probable significant adverse impact on the environment. An environmental impact statement (EIS) is not required under RCW 43.21C.030(2)(c). This decision was made after review of a completed environmental checklist and other information on file with the City of Stanwood. This information is available to the public on request.

Written Comments and Appeals: This Determination of Nonsignificance is issued under WAC 197-11-340(2) with a 14-day comment period. Written comments or appeals may be submitted to the lead agency at the address below. Comments or appeals must be submitted by the end of day **November 2, 2009.** Appeals must provide specific reasons for the appeal and be accompanied by a $350 non-refundable filing fee.

Responsible Official: Rebecca Lind
Community Development Director

Address/Phone: 10220 - 270th St. NW
Stanwood, WA 98292
(360) 629-4577

Signature: Rebecca Lind

CITY OF STANWOOD
ENVIRONMENTAL CHECKLIST

Purpose of checklist:

The State Environmental Policy Act (SEPA), chapter 43.21C RCW, requires all governmental agencies to consider the environmental impacts of a proposal before making decisions. An environmental impact statement (EIS) must be prepared for all proposals with probable significant adverse impacts on the quality of the environment. The purpose of this checklist is to provide information to help you and the agency identify impacts from your proposal (and to reduce or avoid impacts from the proposal, if it can be done) and to help the agency decide whether an EIS is required.

Instructions for applicants:

This environmental checklist asks you to describe some basic information about your proposal. Governmental agencies use this checklist to determine whether the environmental impacts of your proposal are significant, requiring preparation of an EIS. Answer the questions briefly, with the most precise information known, or give the best description you can.

You must answer each question accurately and carefully, to the best of your knowledge. In most cases, you should be able to answer the questions from your own observations or project plans without the need to hire experts. If you really do not know the answer, or if a question does not apply to your proposal, write "do not know" or "does not apply." Complete answers to the questions now may avoid unnecessary delays later.

Some questions ask about governmental regulations, such as zoning, shoreline, and landmark designations. Answer these questions if you can. If you have problems, the governmental agencies can assist you.

The checklist questions apply to all parts of your proposal, even if you plan to do them over a period of time or on different parcels of land. Attach any additional information that will help describe your proposal or its environmental effects. The agency to which you submit this checklist may ask you to explain your answers or provide additional information reasonably related to determining if there may be significant adverse impact.

Use of checklist for nonproject proposals:

Complete this checklist for nonproject proposals, even though questions may be answered "does not apply." in addition, complete the supplemental sheet for nonproject actions (part D).

For nonproject actions, the references in the checklist to the words "project," "applicant," and "property or site" should be read as "proposal," "proposer," and "affected geographic area," respectively.

A. BACKGROUND

1. Name of proposed project, if applicable:

City of Stanwood 2009 Comprehensive Water System Plan

2. Name of applicant:

City of Stanwood

3. Address and phone number of applicant and contact person:

Mr. Andrew Bullington, Public Works Director
City of Stanwood
10220 270th Street NW
Stanwood, WA 98292
(360) 629-5323

4. Date checklist prepared:

October 9, 2009

5. Agency requesting checklist:

City of Stanwood

6. Proposed timing or schedule (including phasing, if applicable):

The City of Stanwood (City) 2009 Comprehensive Water System Plan (WSP) proposes projects that will rehabilitate and replace aging water main and facilities, as well as construct new facilities to accommodate future growth. The WSP Capital Improvement Program (CIP) recommends a schedule for construction of various specific improvements to the water system between 2010 and 2015. General strategies are identified beyond 2015, however another WSP update will be performed in 2015.

7. Do you have any plans for future additions, expansion, or further activity related to or connected with this proposal? If yes, explain.

Yes. This WSP proposes construction of water mains, water storage facilities, pump stations, improvements to supply sources and various associated appurtenances necessary to provide adequate potable water service and fire protection capabilities for the current and future residents of the water service area. In addition, this WSP responds to both current infrastructure needs and planning for future growth. The WSP anticipates a level of population growth established in the City of Stanwood Comprehensive Plan. If the City's Comprehensive Plan identifies a new growth pattern in the future, the subsequent WSP update will reflect this modified growth.

8. List any environmental information you know about that has been prepared, or will be prepared, directly related to this proposal.

Environmental checklists and required related studies will be prepared for individual construction projects listed in the WSP.

9. Do you know whether applications are pending for governmental approvals of other proposals directly affecting the property covered by your proposal? If yes, explain.

None known.

10. List any government approvals or permits that will be needed for your proposal, if known.

Department of Health, Department of Ecology.

11. Give brief, complete description of your proposal, including the proposed uses and the size of the project and site. There are several questions later in this checklist that ask you to describe certain aspects of your proposal. You do not need to repeat those answers on this page. (Lead agencies may modify this form to include additional specific information on project description.)

The City's WSP proposes various improvements that are necessary to resolve existing system deficiencies and plan for the projected growth of water system customers. The WSP details the service area, existing facilities and water use, as well as the construction, operation and maintenance requirements for the water system. The WSP was prepared in accordance with WAC 246-290-100.

12. Location of the proposal. Give sufficient information for a person to understand the precise location of your proposed project, including a street address, if any, and section, township, and range, if known. If a proposal would occur over a range of area, provide the range or boundaries of the site(s). Provide a legal description, site plan, vicinity map, and topographic map, if reasonably available. While you should submit any plans required by the agency, you are not required to duplicate maps or detailed plans submitted with any permit applications related to this checklist.

See included Figure 2-3 of the WSP. The City of Stanwood future water service area was jointly defined as part of the North Snohomish County Coordinated Water System Plan.

B. ENVIRONMENTAL ELEMENTS

1. Earth

a. General description of the site (circle one): Flat, rolling, hilly, steep slopes, mountainous, other

Ground slopes in the project area vary from generally flat in the western portion of the City to as much as 25 to 65 percent in steep slope areas located adjacent to Church Creek in the uplands.

b. What is the steepest slope on the site (approximate percent slope)?

The steepest slopes in the City are associated with the Church Creek riparian corridor and are up to 65 percent in some areas.

c. What general types of soils are found on the site (for example, clay, sand, gravel, peat, muck)? If you know the classification of agricultural soils, specify them and note any prime farmland.

The soils in the area include Puget-Sultan-Pilchuck soils (consisting primarily of Puget silty clay loam) in the flat alluvial portions of the City's service area, and Tokul-Pastik soils (mainly Bellingham silty clay loam and Tokul gravelly loam) in the higher elevations of the eastern portion of the City's service area. The Bellingham silty clay loam and Pastik silt loam, 0-to-8 percent slopes, are associated with lacustrine deposits mixed with alluvium and volcanic ash, respectively. Tokul gravelly loam, 8-to-15 percent slopes, and Tokul-Winston gravelly loam, 25 to 65 percent slopes, are both volcanic ash over basal till. The Tokul-Winston gravelly loam is found throughout the steeply incised Church Creek corridor. The checklists for individual projects will further address this on a site specific basis.

d. Are there surface indications or history of unstable soils in the immediate vicinity? If so, describe.

According to the Geologic Hazards Map (Figure NF-7a) in the City's *2004 Comprehensive Plan Update*, there is a zone of moderate landslide risk associated with moderate slopes of moderate erosion potential along the Church Creek corridor. Along much of Pioneer Highway and the Jorgenson Slough, there is a zone of high landslide risk associated with steep slopes of high erosion potential. Most of the western portion of the City has a high incidence of landslides. The eastern portion of the City has a low incidence of landslides. Most areas beyond the Church Creek and Pioneer Highway/Jorgenson Slough corridors are at low landslide risk and are associated with slight slopes and slight erosion potential. According to the Geologic Hazards Map, most of the western portion of the City is at high risk for seismic hazards, and much of the eastern portion of the City is at low or very low risk for seismic hazards. Slopes, erosion and landslide risks reflect U.S. Department of Agriculture (USDA) data. The incidence of landslide hazards reflects U.S. Geological Survey (USGS) data. Seismic hazards data was gathered from the Washington State Department of Natural Resources (DNR). The checklists for individual projects will further address this on a site specific basis.

e. Describe the purpose, type, and approximate quantities of any filling or grading proposed. Indicate source of fill.

No excavations will occur at this stage of plan adoption. The checklists for individual projects will define the purpose, type and approximate quantities of filling and grading on a site specific basis.

f. Could erosion occur as a result of clearing, construction, or use? If so, generally describe.

Some erosion could potentially occur during the construction of the proposed projects. The checklists for individual projects will further address this on a site specific basis.

g. About what percent of the site will be covered with impervious surfaces after project construction (for example, asphalt or buildings)?

New reservoir, pump station and other facility projects may result in an increase in impervious surfaces. The checklists for individual projects will identify impervious surfaces on a project specific basis. Water main projects will not likely result in new impervious surfaces. Future water main projects will likely be completed in conjunction with new road projects, but will not specifically result in new impervious surfaces.

h. Proposed measures to reduce or control erosion, or other impacts to the earth, if any:

Construction performed during dry periods (between May 1st and September 30th), followed by landscaping and restoration of existing ground contours, features and substrates, will significantly reduce potential erosion impacts. Temporary Erosion and Sedimentation Control (TESC) plans will need to be developed using the City-adopted 2005 Edition of the Washington State Department of Ecology's *Stormwater Management Manual for Western Washington* and approved by the City prior to any construction project.

The provisions set forth in Stanwood Municipal Code Chapter 17.115 Critical Areas – Geologically Hazardous Areas – Specific Standards shall be met for any projects occurring within a geologically hazardous area. The checklists for individual projects will further address this on a site specific basis.

2. Air

a. What types of emissions to the air would result from the proposal (i.e., dust, automobile, odors, industrial wood smoke, etc.) during construction and when the project is completed? If any, generally describe and give approximate quantities if known.

Temporary construction machinery and vehicle exhaust emissions are anticipated during construction of the proposed projects. Dust emissions during excavation may also occur. There shall be no emissions to the air resulting from the operation of the finished projects, with the exception of vehicle emissions generated during employee site visits.

Indirect emissions of the project include those resulting from expanded development within the UGA, such as construction vehicle exhaust and dust, and personal vehicle exhaust and wood/pellet burning stoves. The checklists for individual projects will further address this on a site specific basis.

b. Are there any off-site sources of emissions or odor that may affect your proposal? If so, generally describe.

None known.

c. Proposed measures to reduce or control emissions or other impacts to air, if any:

Vehicle emissions shall be kept to a minimum by turning off construction equipment and other vehicles instead of allowing them to idle during periods when they are not being used. Appropriate dust control measures (sweeping, watering) will be implemented as part of each project's TESC plan to keep construction-generated dust to a minimum. The checklists for individual projects will further address this on a site specific basis.

3. Water

a. Surface:

1) Is there any surface water body on or in the immediate vicinity of the site (including year–round and seasonal streams, saltwater, lakes, ponds, wetlands)? If yes, describe type and provide names. If appropriate, state what stream or river it flows into.

Church Creek and Freedom Creek flow through the eastern portion of the City's water service area, from north to south. Both flow into Jorgenson Slough which is tributary to the Stillaguamish River that flows along the southern edge of the water service area. Palustrine wetlands exist throughout the UGA. Similarly, the Stillaguamish River is associated with estuarine wetlands below the Jorgenson Slough confluence. Douglas Creek is located in the northern portion of the water service area and flows into Skagit Bay. The western portion of the City is also within the 100-year floodplain. The checklists for individual projects will further define surface water bodies located in the immediate vicinity of the specific projects.

2) Will the project require any work over, in, or adjacent to (within 200 feet) the described waters? If yes, please describe and attach available plans.

Proposed CIP projects recommended in the WSP will come near or cross Douglas Creek, Church Creek, Jorgenson Slough, Hatt Slough and the Stillaguamish River. Only conceptual routing has been prepared for these projects, which are shown in Figure 9-1 of the WSP. The checklists for individual projects will further address this on a site specific basis.

3) Estimate the amount of fill and dredge material that would be placed in or removed from surface water or wetlands and indicate the area of the site that would be affected. Indicate the source of fill material.

No fill or dredge activities in water bodies or wetlands is anticipated.

4) Will the proposal require surface water withdrawals or diversions? Give general description, purpose, and approximate quantities if known.

No surface water withdrawals or diversions are anticipated. The City is fully reliant on groundwater withdrawal for its water supply.

5) Does the proposal lie within a 100–year floodplain? If so, note location on the site plan.

The proposed improvements in the western portion of the planning area are located within the 100-year floodplain. The eastern portion of the City's water system is outside of the 100-year floodplain. The checklists for individual projects will further address this on a site specific basis.

6) Does the proposal involve any discharges of waste materials to surface waters? If so, describe the type of waste and anticipated volume of discharge.

No.

b. Ground:

1) Will ground water be withdrawn, or will water be discharged to ground water? Give general description, purpose, and approximate quantities if known.

The City is fully reliant on groundwater withdrawal for its water supply. Chapter 2 of the WSP describes each of the existing withdrawal points in detail. In 2007, the City withdrew approximately 1 million gallons of groundwater per day from existing sources for municipal water supply purposes.

2) Describe waste material that will be discharged into the ground from septic tanks or other sources, if any (for example: Domestic sewage; industrial, containing the following chemicals; agricultural; etc.). Describe the general size of the system, the number of such systems, the number of houses to be served (if applicable), or the number of animals or humans the system(s) are expected to serve.

Not applicable.

c. Water runoff (including stormwater):

1) Describe the source of runoff (including storm water) and method of collection and disposal, if any (include quantities, if known). Where will this water flow? Will this water flow into other waters? If so, describe.

Runoff control during construction will be prescribed in construction documents and individual project TESC plans. The checklists for individual projects will further address this on a site specific basis.

2) Could waste materials enter ground or surface waters? If so, generally describe.

No.

d. Proposed measures to reduce or control surface, ground, and runoff water impacts, if any:

- In all areas of special flood hazard, the provisions set forth in the Stanwood Municipal Code Chapter 17.120 Critical Areas – Frequently Flooded Area – Specific Standards shall be met.
- In all wetlands and wetland buffers, the provisions set forth in the Stanwood Municipal Code Chapter 17.125 Critical Areas – Wetlands – Specific Standards shall be met.
- In all areas of aquifer recharge, including Wellhead Protection Areas, the provisions set forth in the Stanwood Municipal Code Chapter 17.135 Critical Areas – Critical Aquifer Recharge Areas – Specific Standards shall be met.
- Construction would typically be performed during dry periods between May 1st and September 30th, followed by landscaping and restoration of existing ground contours, features and substrates. TESC plans will need to be developed and approved by the City prior to any construction project. The provisions set forth in Stanwood Municipal Code Chapter 17.140 Stormwater Management Performance Standards shall be met.
- The checklists for individual projects will further address this on a site specific basis.

4. Plants

a. Check or circle types of vegetation found on the site:

_x_ deciduous tree: alder, maple, aspen, other
_x_ evergreen tree: fir, cedar, pine, other
_x_ shrubs
_x_ grass
_x_ pasture
__ crop or grain
_x_ wet soil plants: cattail, buttercup, bull rush, skunk cabbage, other
__ water plants: water lily, eelgrass, milfoil, other
__ other types of vegetation

b. What kind and amount of vegetation will be removed or altered?

Generally, CIP projects occur in unvegitated improved rights-of-way or new rights-of-way cleared for road improvements however some specific projects may require the removal of vegetation. The checklists for individual projects will further address this on a site specific basis.

c. List threatened or endangered species known to be on or near the site.

According to the DNR Natural Heritage Program (NHP), a Natural Heritage Feature is recorded for Section 25, Township 32, Range 03E. This section contains part of the Stillaguamish River, and the City's Wastewater Treatment Plant. NHP's List of Known Occurrences of Rare Plants in Washington for Snohomish County (last updated February

2008) contains one Federal Species of Concern, stalked moonwort, *Botrychium pedunculosum,* but no listed threatened or endangered species. NHP's Snohomish County list does contain three State-threatened plant species. They are: Smoky Mountain sedge, *Carex proposita,* water lobelia, *Lobelia dortmanna,* and Choris' bog-orchid, *Platanthera chorisiana.* This list is county-wide and does not necessarily reflect occurrence of these species in the City. The checklists for individual projects will further address this on a site specific basis.

d. Proposed landscaping, use of native plants, or other measures to preserve or enhance vegetation on the site, if any:

Landscaping and screening may be part of the requirements for facility projects. Any necessary landscaping shall utilize native plants when appropriate. The checklists for individual projects will further address this on a site specific basis.

5. Animals

a. Circle any birds and animals which have been observed on or near the site or are known to be on or near the site:

birds: hawk, heron, eagle, songbirds, other:
mammals: deer, bear, elk, beaver, other:
fish: bass, salmon, trout, herring
other: rainbow trout.

b. List any threatened or endangered species known to be on or near the site.

The Washington State Department of Fish and Wildlife (WDFW) Salmonid Stock Inventory (SaSI) indicated the following threatened species presence and status within Church Creek/Jorgenson Slough and the Stillaguamish River.

<u>Church Creek/Jorgenson Slough</u>

- Winter steelhead (*Oncorhyncus mykiss*) – depressed status

<u>Stillaguamish River</u>

- Winter steelhead (*Oncorhyncus mykiss*) – depressed status
- Summer steelhead (*Oncorhyncus mykiss*) – depressed status
- Bull trout (*Salvelinus confluentus*) – Designated Critical Habitat

The Chinook salmon (*Oncorhyncus tshawytscha*) Puget Sound ESU and Steelhead (*O. mykiss*) Puget Sound DPS encompass City limits and are listed as threatened under the Endangered Species Act. Bull trout (*Salvelinus confluentus*) are listed as threatened and have designated critical habitat in the Stillaguamish River.

c. Is the site part of a migration route? If so, explain.

Bald eagles (not federally listed, but still protected under the Migratory Bird Treaty and Bald and Golden Eagle Protection Act) have been reported in the City's water service area. The Puget Sound Lowlands are part of the Pacific Flyway for migratory birds, and birds regularly use areas within the City for resting and feeding during the migratory season.

d. Proposed measures to preserve or enhance wildlife, if any:

Construction work must occur within specific windows that do not interfere with migration and spawning of listed salmonids and nesting bald eagles. Construction activities must meet the provisions set forth in Stanwood Municipal Code Chapter 17.130 Critical Areas – Fish and Wildlife Habitat Conservation Areas – Specific Standards.

6. Energy and Natural Resources

a. What kinds of energy (electric, natural gas, oil, wood stove, solar) will be used to meet the completed project's energy needs? Describe whether it will be used for heating, manufacturing, etc.

Petroleum fuels and lubricants will be consumed by machinery used during construction. Operation of some water system facilities will require electricity and backup diesel or gas-run generators that may be located on-site in the event of power outages.

b. Would your project affect the potential use of solar energy by adjacent properties? If so, generally describe.

No.

c. What kinds of energy conservation features are included in the plans of this proposal? List other proposed measures to reduce or control energy impacts, if any:

Use of high efficiency pumps and motors and water main of sufficient diameter to minimize pumping head losses (and associated power usage).

7. Environmental Health

a. Are there any environmental health hazards, including exposure to toxic chemicals, risk of fire and explosion, spill, or hazardous waste that could occur as a result of this proposal? If so, describe.

Small amounts of sodium hypochlorite, sulfuric acid and ferric chloride are currently used to treat source water before it is delivered to customers.

1) Describe special emergency services that might be required.

None are anticipated. Local police, fire and aid should suffice during construction.

2) Proposed measures to reduce or control environmental health hazards, if any:

All drains for these chemicals will be secondary contained for safe transport to a lined waste manhole in the event of a spill. All necessary safety equipment for chemical handling will be provided.

b. Noise

1) What types of noise exist in the area which may affect your project (for example: traffic, equipment, operation, other)?

None.

2) What types and levels of noise would be created by or associated with the project on a short–term or a long–term basis (for example: traffic, construction, operation, other)? Indicate what hours noise would come from the site.

Temporary construction noise may be expected during working hours. No long-term noise is anticipated with any of the identified improvements. Some noise will be generated by electric motors and pumps at the new pump stations.

3) Proposed measures to reduce or control noise impacts, if any:

Construction equipment will need to be properly maintained and muffled, and the hours of construction will be limited to coincide with the normal workday period. Pumps will be enclosed in a building or other structure to minimize noise impacts. The checklists for individual projects will further address this on a site specific basis.

8. Land and Shoreline Use

a. What is the current use of the site and adjacent properties?

Land use in the City of Stanwood's water service area is a mixture of residential, commercial, industrial, agricultural, farmland and public facilities as shown in Figure 3-1 of the WSP.

b. Has the site been used for agriculture? If so, describe.

Portions of the planning area have been and continue to be used for agriculture.

c. Describe any structures on the site.

A variety of typical residential, business, commercial and industrial structures exist in the City's water service area.

d. Will any structures be demolished? If so, what?

None anticipated.

e. What is the current zoning classification of the site?

The zoning in the City's water service area is a mixture of residential, business, commercial, and industrial zones. The checklists for individual projects will further address this on a site specific basis.

f. What is the current comprehensive plan designation of the site?

The current comprehensive plan designations are consistent with the mixed uses in the City's water service area. The checklists for individual projects will further address this on a site specific basis.

g. If applicable, what is the current shoreline master program designation of the site?

The shoreline designation of the Stillaguamish River adjacent to the City is urban.

h. Has any part of the site been classified as an "environmentally sensitive" area? If so, specify.

The City maintains Critical Areas regulations and maps that specifically identify such areas within the City limits (Stanwood Municipal Code Chapters 17.114 through 17.135). The checklists for individual projects will further address this on a site specific basis.

i. Approximately how many people would reside or work in the completed project?

The projects will provide essential potable water supply for the City of Stanwood water system, which is projected to serve a resident population of 12,670 by 2027. No one will reside or work in the proposed projects themselves, but the construction of these projects will allow further development of the City's service area. Public works employees and City engineering consultants are anticipated to occasionally visit the finished projects primarily for maintenance purposes.

j. Approximately how many people would the completed project displace?

None.

k. Proposed measures to avoid or reduce displacement impacts, if any:

Not applicable.

l. Proposed measures to ensure the proposal is compatible with existing and projected land uses and plans, if any:

The WSP was developed to ensure compatibility with the Growth Management Act, City of Stanwood Comprehensive Plan, Snohomish County Comprehensive Plan and the North Snohomish County Coordinated Water System Plan.

9. Housing

a. Approximately how many units would be provided, if any? Indicate whether high, middle, or low–income housing.

The indirect effect of new housing and other structures is not known as a result of the WSP. No housing is expected to directly occur as a result of these projects; however, the proposed projects will allow for continued residential growth.

b. Approximately how many units, if any, would be eliminated? Indicate whether high, middle, or low–income housing.

The indirect effect of new or eliminated housing and other structures is not known as a result of the WSP. No housing is expected to be eliminated as a result of the proposed projects.

c. Proposed measures to reduce or control housing impacts, if any:

Not applicable.

10. Aesthetics

a. What is the tallest height of any proposed structure(s), not including antennas; what is the principal exterior building material(s) proposed?

The tallest proposed structure in the WSP is a 300,000 gallon storage reservoir. This facility may be similar in height to the City's existing Knittle Reservoirs, which are approximately 50 feet tall and will likely be constructed of steel or concrete. Actual dimensions and materials will be established at the design stage and the checklist for the individual project will further address this on a site specific basis.

b. What views in the immediate vicinity would be altered or obstructed?

Unknown. The checklists for individual projects will further address this on a site specific basis.

c. Proposed measures to reduce or control aesthetic impacts, if any:

Screen fencing and vegetation screening will likely be utilized. The checklists for individual projects will further address this on a site specific basis..

11. Light and Glare

a. What type of light or glare will the proposal produce? What time of day would it mainly occur?

The proposed projects would generate no light or glare.

b. Could light or glare from the finished project be a safety hazard or interfere with views?

No.

c. What existing off–site sources of light or glare may affect your proposal?

None known.

d. Proposed measures to reduce or control light and glare impacts, if any:

None.

12. Recreation

a. What designated and informal recreational opportunities are in the immediate vicinity?

The proposed projects would allow for the continued passive recreational opportunities that are consistent with the commercial and residential character of the City's water service area.

b. Would the proposed project displace any existing recreational uses? If so, describe.

No recreational uses will be displaced.

c. Proposed measures to reduce or control impacts on recreation, including recreation opportunities to be provided by the project or applicant, if any:

None.

13. Historic and Cultural Preservation

a. Are there any places or objects listed on, or proposed for, national, state, or local preservation registers known to be on or next to the site? If so, generally describe.

According to the Washington Heritage Register (WHR), the Stanwood International Order of Odd Fellows (IOOF) Public Hall, located at 27128 102nd Avenue NW was registered as a WHR and National Register Historic Site in 1973. Also, the house of D.O. Pearson, located at 27108 102nd Avenue was registered as a WHR and National Register Historic Site in 2002. Both sites are located in the western portion of the City. The D.O. Pearson house was registered for Architectural significance, and the IOOF Hall was registered for Social History significance.

b. Generally describe any landmarks or evidence of historic, archaeological, scientific, or cultural importance known to be on or next to the site.

See above.

c. Proposed measures to reduce or control impacts, if any:

If cultural artifacts or historic resources are uncovered during construction, project work should be suspended immediately. Appropriate authorities at the County and State levels would be notified and appropriate measures would be taken to protect these resources.

14. Transportation

a. Identify public streets and highways serving the site, and describe proposed access to the existing street system. Show on site plans, if any.

The major highway running through the project area is SR 532 as shown in Figure 2-1 of the WSP. Water main projects are proposed for Pioneer Highway and 271st Street NW (downtown Stanwood), as well as other short sections of residential collectors in the City's waster service area. These construction projects would not likely require full-closure of these streets, and the City will make the effort to keep two-way traffic open where possible. If traffic impacts are anticipated, traffic planning may be necessary and would be completed in coordination with the City. The construction of facility projects will likely not affect public streets or highways. The checklists for individual projects will further address this on a site specific basis.

b. Is site currently served by public transit? If not, what is the approximate distance to the nearest transit stop?

The City is served by Community Transit, with stops throughout the area.

c. How many parking spaces would the completed project have? How many would the project eliminate?

No parking spaces will be constructed as a part of the WSP unless the projects are done in conjunction with road or parking projects.

d. Will the proposal require any new roads or streets, or improvements to existing roads or streets, not including driveways? If so, generally describe (indicate whether public or private).

Some of the anticipated water main work may allow opportunities for roadway improvements.

e. Will the project use (or occur in the immediate vicinity of) water, rail, or air transportation? If so, generally describe.

A few of the proposed projects will require installation of water main crossing Burlington Northern Railroad tracks as shown in Figure 9-1 of the WSP. The proposed projects will not use water, rail or air transportation, and will generally not occur in the immediate vicinity of water or air transportation features.

f. How many vehicular trips per day would be generated by the completed project? If known, indicate when peak volumes would occur.

The proposed projects should not measurably, directly increase vehicular traffic in the planning area, with the exception that indirectly, growth can occur as planned in the City's water service area.

g. Proposed measures to reduce or control transportation impacts, if any:

Construction would take place in a timely manner to minimize obstructions and alterations of local traffic flow. Approved traffic control will be provided during construction if needed.

15. Public Services

a. Would the project result in an increased need for public services (for example: fire protection, police protection, health care, schools, other)? If so, generally describe.

The Plan includes recommendations that will improve the current level of public services and accommodate future service needs. Proposed improvements will help ensure adequate and responsive water service for the residential and commercial growth projected in the City.

b. Proposed measures to reduce or control direct impacts on public services, if any.

None.

16. Utilities

a. Circle utilities currently available at the site:

Electricity, water, natural gas, refuse service, telephone, sanitary sewer, septic, cable and curbside recycling are available throughout the City's water service area.

b. Describe the utilities that are proposed for the project, the utility providing the service, and the general construction activities on the site or in the immediate vicinity which might be needed.

The WSP describes the expansion and improvement of the City's existing water system as described in Chapter 9.

C. SIGNATURE

The above answers are true and complete to the best of my knowledge. I understand that the lead agency is relying on them to make its decision.

Signature: _____

Date Submitted: _____

D. SUPPLEMENTAL SHEET FOR NONPROJECT ACTIONS

(Do not use this sheet for project actions.)

Because these questions are very general, it may be helpful to read them in conjunction with the list of the elements of the environment.

When answering these questions, be aware of the extent the proposal, or the types of activities likely to result from the proposal, would affect the item at a greater intensity or at a faster rate than if the proposal were not implemented. Respond briefly and in general terms.

1. How would the proposal be likely to increase discharge to water; emissions to air; production, storage, or release of toxic or hazardous substances; or production of noise?

Discharge to Water
During the construction of the proposed water main and facility projects, discharge of turbid water could occur. After the projects are constructed and in use, development in the City's water service area may be expanded into the new areas served by the City's water system. Without these utility improvements, development projects would be unable to occur at the housing density the City anticipates will be necessary to accommodate growth. More development and higher population will produce more wastewater to be treated and discharged. Increased impervious surfaces will increase discharge of stormwater to local water bodies (Stillaguamish River), which may also contribute to higher flood risks.

Emissions to Air
Temporary construction emissions expected include exhaust from machinery and vehicles, and dust. Personal vehicles belonging to the new homes built as a result of the improved and expanded water system and various heating methods (wood and pellet burning stoves) would contribute exhaust and greenhouse gas emissions to the air.

Production, Storage, and Release of Toxic or Hazardous Substances
Chemicals such as sodium hypochlorite, ferric chloride and sulfuric acid may be used in proposed supply facilities to treat raw source water for potable uses. Chemicals will likely be stored on site. The proposed projects will generally improve existing conditions by accommodating future growth and ensuring a safe and reliable water supply.

Production of Noise
Temporary construction noise would be limited to daytime, work-day hours. Subsequent development of residential and commercial structures will also result in temporary construction noise. The production of noise created in new residential and commercial areas should be equal to current ambient noise levels within the City limits.

Proposed measures to avoid or reduce such increases are:

Reducing Discharges to Water

- TESC plans for each construction project will minimize and protect water bodies from turbid water discharge and runoff.
- Construction work will comply with near-water work windows to avoid disturbing sensitive and protected fish and wildlife.

Reducing Emissions to Air

- Construction machinery and vehicle emissions shall be kept to a minimum by turning off equipment instead of idling during periods when equipment is not in use.
- Appropriate dust control measures (sweeping, watering) will be implemented as part of each project's TESC plan to keep construction generated dust to a minimum.
- Green technologies and equipment should be utilized within construction of the proposed projects when plausible.

Reducing the Production, Storage, and Release of Toxic or Hazardous Substances

All drains for these chemicals will be secondary contained for safe transport to a lined waste manhole in the event of a spill. All necessary safety equipment for chemical handling will be provided.

Reducing the Production of Noise

Limit construction work to daytime, work-day hours, Monday through Friday.

2. How would the proposal be likely to affect plants, animals, fish, or marine life?

Once completed, the water main projects will be fully buried within road right-of-way. During construction, discharge of turbid water to streams may occur, which could disrupt salmonid life history stages. Staging of excavation and fill materials and equipment on land would affect any plants in the immediate area.

The facility projects could have some localized effects on plants, animals and fish. These projects could require clearing of existing vegetation, which could in turn affect wildlife that utilizes that vegetation for food or shelter. Clearing and grading for facilities may result in discharge of turbid water to streams, which could disrupt migration or rearing of salmonids.

Proposed measures to protect or conserve plants, animals, fish, or marine life are:

- TESC plans for each construction project will create means to protect water bodies from turbid water discharge and runoff.
- Working during the summer month work-window presents less of a risk for turbid discharge since rain events are less frequent and severe.
- Staging materials and equipment should be located on impervious surfaces or in previously cleared or impacted areas if possible.
- There should be no further clearing of vegetation beyond what is needed for the construction of the projects.

3. How would the proposal be likely to deplete energy or natural resources?

Petroleum resources will be used for the construction of the proposed projects (fuel for construction machinery and vehicles) and subsequent construction of residential and commercial structures. Housing and other structures will require heating (natural gas and wood/pellet burning stoves) and electricity.

Proposed measures to protect or conserve energy and natural resources are:

- Use of high efficiency pumps and motors and water main of sufficient diameter to minimize pumping losses (and associated power usage).

4. How would the proposal be likely to use or affect environmentally sensitive areas or areas designated (or eligible or under study) for governmental protection; such as parks, wilderness, wild and scenic rivers, threatened or endangered species habitat, historic or cultural sites, wetlands, floodplains, or prime farmlands?

The proposal should have no direct effect on parks, wilderness, wild and scenic rivers, floodplains or prime farmlands. The project could directly affect sensitive areas such as federally-listed threatened species habitat, cultural sites and wetlands. As discussed previously, construction of these projects could potentially discharge turbid water to water bodies (including riparian wetland areas). Church Creek and the Stillaguamish River are salmon-bearing streams. Bull trout is federally-listed as threatened, and has designated critical habitat in the Stillaguamish River. Finally, any excavation near waterways in the Puget Sound Lowlands could result in the discovery of historic Native American cultural artifacts and sites.

The proposal could have indirect effects (via expanded clearing, grading and building in the service areas) on federally-listed threatened species habitat, cultural sites, wetlands and floodplains. Discharge of turbid water to Church Creek and the Stillaguamish River could affect rearing and migrating bull trout and salmonids, critical habitat and riparian wetlands associated with these water bodies. Excavation of structure foundations could uncover cultural sites. Impervious surfaces (buildings, parking lots, roads) result in increased stormwater runoff, which could contribute to flooding issues in the Stillaguamish floodplain.

Proposed measures to protect such resources or to avoid or reduce impacts are:

- TESC plans for each construction project will create means to protect water bodies from turbid water discharge and runoff.
- Working during the summer month work-window presents less of a risk for turbid discharge since rain events are less frequent and severe.
- Construction work will comply with near-water and migratory bird work windows to avoid disturbing federally-listed salmonids and wildlife.
- Staging materials and equipment should be located on impervious surfaces or in previously cleared or impacted areas if possible.

- There should be no further clearing of vegetation beyond what is needed for the construction of the projects.
- If cultural artifacts or historic resources are uncovered during construction, project work should be suspended immediately. Appropriate authorities at the County and State levels should be notified and appropriate measures taken to protect these resources.

5. How would the proposal be likely to affect land and shoreline use, including whether it would allow or encourage land or shoreline uses incompatible with existing plans?

The proposed projects in the WSP would allow for an expansion of residential and commercial uses within the City's UGA. The UGA was defined specifically to accommodate population growth in the City.

Proposed measures to avoid or reduce shoreline and land use impacts are:

Minimize clearing and grading of vegetation to that directly needed to accomplish the proposed project. Ensure projects are consistent with City Planning objectives and ordinances.

6. How would the proposal be likely to increase demands on transportation or public services and utilities?

The direct transportation effects of the proposed projects associated with the WSP could be temporary loss of sidewalks, on-street parking, lane closures or detours near water main installation within road right-of-way. Bus stops may also be temporarily affected by work in the right-of-way. Water service and other utility services should not be affected during construction.

Indirect effects of the proposed projects on transportation would be increased road usage and the need to build new roads for new developments and potentially expand and make more frequent repairs to existing roads. Higher population may result in increased ridership of community transit and expanded service route frequency and stops. The expansion and improvement of the water system will result in the ability to supply more water to support new residential and commercial developments.

Proposed measures to reduce or respond to such demand(s) are:

- Construction would take place in a timely manner to minimize obstructions and alterations of local traffic flow.
- City-approved traffic control will be provided during construction if needed.

7. Identify, if possible, whether the proposal may conflict with local, state, or federal laws or requirements for the protection of the environment.

The proposed projects may conflict with environmental protection laws; however, all projects proposed will be required to obtain applicable local, state and federal permits, which are intended to encourage avoidance, minimization and mitigation for adverse environmental impacts. A preliminary list of potential permits needed for proposed water main and facility projects are listed below.

City of Stanwood

- Building, Right-of-Way and Site Development Permits
- Floodplain Development Permit
- Critical Areas Compliance
- Shoreline Conditional Use or Variance Permit (for structures within 200 feet landward of a water body)

State

- State Department of Ecology General Order of Approval for Diesel or Gas Emergency Electrical Generators (for back-up generators during power outages).
- Section 401 Water Quality Certification through State Department of Ecology (needed if Section 404 required).

Federal

- Federal permits for work within wetlands or waters of the State (i.e. Section 404 or Section 10 approval through the Army Corps of Engineers), including associated Endangered Species Act, Coastal Zone Management and National Historic Preservation Act compliance.

APPENDIX F

WATER USE EFFICIENCY PROGRAM

Water Use Efficiency Program

INTRODUCTION

The City of Stanwood (City) recognizes that water is a valuable and essential natural resource that needs to be used wisely. This Water Use Efficiency (WUE) program provides an approach to increase water use efficiency within the City's water service area.

BACKGROUND

The Water Use Efficiency Rule

In September 2003, the Washington State Legislature passed the Municipal Water Supply – Efficiency Requirements Act, also known as the Municipal Water Law. The Municipal Water Law required the State to implement the Water Use Efficiency Rule. The intent of this rule is to help reduce the demand that growing communities, agriculture and industry have placed on our State's water resources, and to better manage these resources for fish and other wildlife. Municipal water suppliers are obligated under the Water Use Efficiency Rule to enhance the efficient use of water by the system and/or its consumers.

The Water Use Efficiency Rule applies to all municipal water suppliers and requires suppliers to:

- Develop WUE goals through a public process and report annually on their performance;
- Maintain distribution system leakage at or below 10 percent of production;
- Meter all existing and new service connections;
- Collect production and consumption data, calculate distribution system leakage and forecast demands;
- Evaluate WUE measures; and
- Implement a WUE program.

Water Use Efficiency Program Requirements

The *Water Use Efficiency Guidebook,* originally published by the Washington State Department of Health (DOH) in July 2007 and revised in January 2009, identifies the water use reporting, forecasting and efficiency program requirements for public water systems. A WUE program meeting these requirements is a necessary element of a water system plan as required by the DOH and is necessary to obtain water right permits from the Washington State Department of Ecology (Ecology). The *Water Use Efficiency Guidebook* defines the necessary components of a WUE program as four fundamental elements.

1. Planning requirements that include collecting data, forecasting demand, evaluating WUE measures, calculating distribution system leakage and implementing a WUE program to meet goals.
2. A distribution system leakage (DSL) standard of 10 percent or less based on a 3-year rolling average. For systems with less than 500 connections, the DSL standard may be increased to 20 percent if a request with supporting data is provided to the DOH.
3. Goal setting to provide a benchmark for achievement and to help define the success of the WUE program.
4. Annual performance reporting on progress towards meeting WUE goals.

WATER SUPPLY CHARACTERISTICS

All water supply to the City's water system is provided by four groundwater wells in the East Stanwood Aquifer and one groundwater spring source. The City's oldest source of supply, the Hatt Slough Springs, is located south of the City limits on the south side of the Hatt Slough and provides only a small portion of the total water supply to the system. The main source of supply is from the Bryant Wells, located near State Route (SR) 532 and 268th Street NW. However, Bryant Well No. 2 has declined in capacity and is currently planned for replacement. The Cedarhome Well was recently installed to replace the Sill Well and is located east of Cedarhome Elementary School. Fure Well, which is located within the northeast corner of the City limits, provides a small portion of water supply to the system. A summary of the well sources is shown in **Table 1**, and a more detailed description of each source of supply is provided in **Chapter 2** of the City's *Comprehensive Water System Plan* (WSP).

Table 1
Supply Facilities Summary

Well	Pressure Zone	Year Drilled	Existing Pumping Capacity (gpm)	Well Depth (feet)	Well Diameter (inches)	Pump Type	Pump Motor Size (hp)	Water Treatment[2]	Control Facility
Bryant Well #1	297 Zone	1948	1,350	250	12	Turbine	75	Cl_2/Mn/H_2S/As	Knittle Tanks
Bryant Well #2[1]	297 Zone	1966	350	200	12	Turbine	75	none	Knittle Tanks
Fure Well	297 Zone	1951	100	157	12	Turbine	15	none	Continuous
Hatt Slough Springs	125 Zone	1934	350	n/a	n/a	Centrifugal	10	Cl_2	Continuous
Cedarhome Well	297 Zone	2008	600	490	12 & 16	Turbine	100	Cl_2	Knittle Tanks

1 = Bryant Well #2 is scheduled for replacement.

2 = Cl_2: chlorination; Mn: manganese filtration; H_2S: hydrogen sulfide removal; As: arsenic removal.

The City currently holds several water right permits and certificates for the supply facilities shown in **Table 1**. A summary of these water rights is presented in **Table 2**. The City has acquired water right certificates for all of the sources shown in the table. Additional water rights information for each source may be found in **Chapter 6** and on the certificates, permits and water rights self assessment, which are included in **Appendix I**.

Table 2
Existing Water Rights

DOH No.	Source Name	Permit or Certificate Number	Old Certificate Number	Priority Date	Primary or Supplemental Right	Use	Existing Water Rights			
							Instantaneous		Annual	
							(gpm)	(cfs)	(acre-ft)	(gpm)
S01	Hatt Slough Springs	S1-02432CWRIS	1164 (old permit 1234)	9/28/1928	Primary	Permanent	1,125	2.5	-	-
S02	Bryant No. 1[1]	G1-00741CWRIS	615 (old permit 670)	2/20/1948	Primary	Permanent	2,000	4.5	2,400	1,487
S03	Bryant No. 2[1]	G1-00741CWRIS	615 (old permit 670)	2/20/1948	Primary	Emergency	2,000	4.5	2,400	1,487
S04	Fure Well	G1-01067CWRIS	616 (old permit 976)	2/11/1949	Primary	Emergency	150	0.3	121	75
S07	Cedarhome Well[2] (transferred from Sill Well)	CG1-04239	2986 (Sill Well)	3/6/1956 9/21/2001 (change)	Primary	Permanent	500	1.1	807	500

1 = Bryant Wells No. 1 and No. 2 are authorized by the same water right. Quantities shown are for the entire right, not each individual well.
2 = The change application for Cedarhome Well was approved for 500 gpm; however, the Sill Well water right was 600 gpm. Ecology agreed to approve the transfer of 600 gpm provided that it could be shown that the withdrawal of 600 gpm would not cause seawater intrusion. The City is working on developing this information for Ecology's review.

Sources of water derive from recharge of precipitation into aquifers that discharge to City-owned wells and springs. The groundwater recharge does not appear to be restricted by growth in the aquifer recharge areas for these sources. Groundwater recharge to the City's sources of supply occurs within the Stillaguamish River watershed (WRIA 5) and these sources are beneficially used within WRIA 5.

The sources of supply are not located in any of the 16 fish-critical basins established by the Department of Ecology. The City water rights are senior to instream flow rule and not subject to limitation by stream flow in the Stillaguamish River or its tributaries. The Stillaguamish River Watershed Chinook Salmon Recovery plan has identified increasing stream flow as a goal to improve habitat conditions for Chinook salmon, a species designated under the Endangered Species Act as Threatened in the Stillaguamish basin. However, stream flow in the tidally-influenced portion of the Stillaguamish River is not considered a limiting factor in salmon recovery planning.

Environmental factors such as drought or climate change are not likely to affect recharge to the sources. Groundwater levels fluctuate seasonally but recover each spring to previous year levels. Some general declines in water levels during pumping are attributed to well inefficiency, which will be addressed within the 6-year planning period as part of the WSP CIP to rehabilitate existing wells or replace supply wells in the same body of groundwater.

WATER USE EFFICIENCY PROGRAM

As previously described, the fundamental elements of a WUE program include planning requirements and DSL standards, as well as goal setting and performance reporting. The City's water use data, demand forecasts and other planning requirements are contained in **Chapter 4** of the WSP. The City is committed to continue collecting water use data beyond that presented in **Chapter 4** for evaluation of its WUE program and water use patterns, and for forecasting demands for future facilities. The City's WUE program that follows includes a statement of its goals and objectives, the evaluation and selection of alternative efficiency measures, the schedule and budget, and the method of program monitoring.

Water Use Efficiency Goals and the Public Process

Per WAC 246-290-830, WUE goals must be set through a public process and shall be evaluated and reestablished a minimum of every six years. In compliance with the new WUE Rule, a public hearing was held on January 24, 2008 to present and discuss goals. Background on the City's proposed WUE program, water supply characteristics, water demand forecasts and other elements were made available two weeks prior to the public forum date. All comments received at the forum were reviewed and considered by the City. The City's current WUE goals were adopted by the City at a regularly scheduled City Council meeting on February 3, 2008. In the future, WUE goals will be evaluated and reestablished during the water system planning process, or at minimum of every six years.

Based on the successful implementation of the current WUE program, the City has achieved one of the goals adopted in 2008 and has saved approximately 165 million gallons of water over the previous 6 years. New goals have been proposed based on the demand analysis and projections presented in the City's *Comprehensive Water System Plan* (WSP). It is anticipated that the proposed goals will be adopted along with the WSP at a regularly scheduled City Council meeting. Prior to adoption of the goals, a public notice will be posted at least two weeks before a City Council meeting public forum for presenting and considering public comments.

The proposed goals and objectives of the City's WUE program consist of:

- Reduce the 4-year rolling average demand per equivalent residential unit (ERU) by 5 percent by 2019 and by 8 percent by 2029. This represents an average demand per ERU of 201 gallons per day by 2019 and 195 gallons per day by 2029; and
- Maintain distribution system leakage at 10 percent or less through 2029.

The City will achieve these goals and objectives through the implementation of the WUE program that follows. Reducing DSL is a supply side goal that can be achieved through measures that will mainly be carried out by the City's Water Department or in coordination with other City departments. Reducing the demand per ERU is a demand side goal that can be achieved through carrying out measures that affect customers' water use.

Evaluation and Selection of Water Use Efficiency Measures

The City's evaluation of WUE measures and selected levels of implementation are presented within this section. The measures fall within three categories of implementation: 1) mandatory measures that must be implemented; 2) measures that must be evaluated; and 3) additional measures selected by the City that must be either evaluated or implemented.

The City served 3,051 water service connections in 2009. Based on the number of connections, at least six WUE measures must be evaluated or implemented. Measures that are mandatory cannot be credited towards the system's WUE measures. Since the City implements the minimum number of required measures, a cost-effective evaluation is not required.

Mandatory Measures

Source Meters

The volume of water produced by the system's sources must be measured using a source meter or other meter installed upstream of the distribution system. Source meters are currently installed and operating at each of the City's sources. If any new sources are installed in the future, they will be equipped with a source meter.

Service Meters

All public water systems that supply water for municipal purposes must install individual service meters for all water users. Service meters are currently installed and operating at all connections throughout the distribution system. All future connections that are installed or activated will be equipped with a service meter.

Meter Calibration

The City must calibrate and maintain meters based on generally accepted industry standards and manufacturer information. Compliance will be maintained by the City by performing maintenance on the source and service meters every five to ten years at a minimum. Meter calibration is performed on an as-needed basis, typically when meter readings are inconsistent with customer consumption history.

Water Loss Control Action Plan

To control leakage, systems that do not meet the DSL standard must implement a Water Loss Control Action Plan (WLCAP). The City's rolling 3-year average DSL was 10 percent in 2009; however, total distribution system leakage in 2009 alone was only 8.6 percent. The City has increased recordkeeping and estimating of authorized water consumption uses such as construction, flushing and fire fighting activities to reduce the amount of DSL in the system. The City will also conduct a system-wide leak detection survey in 2010, 2011 and 2012 to identify leaking water mains. It is anticipated that the 2009 DSL of 8.6 percent can be maintained through new record keeping practices and the completion of the leak detection survey in 2012.

Customer Education

Annual customer education regarding the importance of using water efficiently is a required element of all WUE programs. Customer education is provided in the City's annual Consumer Confidence Report (CCR) to customers and includes information on the system's DSL, progress towards meeting WUE goals and tips for customers on using water more efficiently.

Measures That Must Be Evaluated

Rate Structure

A rate structure that encourages WUE and provides economic incentives to conserve water must be evaluated, but is not required to be implemented. The City's current utility rates are designed to discourage excessive water use. The uniform block rate structure imposes a unit charge for water use above the base amount allowed for each meter size. For ¾-inch meters that typically serve single family residences, customers that use over 600 cubic feet in one billing cycle are billed an additional $2.31 for every 100 cubic feet of water consumed in excess of 600 cubic feet.

The City will be conducting a water rate study in 2010 and will consider alternative rate structures that will further encourage WUE. The water rate study will evaluate an inclining block rate structure that imposes an increased unit charge with higher water use above the base amount allowed. The rate study will also evaluate seasonal rates to reduce peak summer water use.

Reclamation Opportunities

The City has evaluated reclamation opportunities but has determined that reuse opportunities will not be beneficial because the cost to construct improvements to the existing wastewater treatment plant and separate conveyance systems is much more than the financial savings resulting from the potential water savings.

The City's wastewater treatment plant does not treat wastewater to a level that can be used for reclaimed purposes. Significant upgrades to the wastewater treatment plant and the installation of purple pipe would be necessary to provide reclaimed water to customers. The City's highest water users consist of businesses such as food processing and packing plants, a nursing facility and a grocery store that rely on potable water and likely would not purchase reclaimed water. Customers that could utilize reclaimed water include large irrigators such as parks, schools and cemeteries. A car wash facility is also located near the wastewater treatment plant and could utilize reclaimed water if available.

The City's 2009 *Comprehensive Sewer System Plan* recommends a Headworks Study and Loading Analysis to be completed in 2014. The study will consider improvements to enable the wastewater treatment plant to produce reclaimed water when the treatment capacity is expanded. Improvements to the wastewater treatment plants are scheduled beyond 2022 in the *2009 Comprehensive Sewer System Plan*.

Selected measures

The City has chosen to implement three different WUE measures in addition to those that are mandatory or required to be evaluated. Each of the chosen measures will be implemented for all three customer classes. The City's WUE program, therefore, counts as nine WUE measures, which exceeds the requirement of six WUE measures based on the number of service connections.

Customer Education

Customer education that is carried out more than once a year counts towards meeting the program requirements for WUE measures. The City will provide periodic customer education, in addition to the annual CCR, through school outreach activities, brochures in water bills and support of regional educational programs. Since this measure will be implemented for all customer classes, it counts as three WUE measures for the City's program.

Indoor Conservation Kits

The City will offer free indoor conservation kits to all customers. These kits may include high efficiency showerheads, faucet aerators, toilet tank water displacement bags, leak detection dye tablets for toilets and informational brochures. Additional advertising efforts will be made to promote the availability of these kits, which include placing notices in utility bills, links on the City website and displaying the kits at public events. Since this measure will be implemented for all customer classes, it counts as three WUE measures for the City's program.

Outdoor Conservation Kits

The City will offer free outdoor conservation kits to all customers. These kits could include a garden hose nozzle, an automatic shut-off for manual lawn and garden sprinklers, rain gauge and leaky hose repair kit. Additional advertising efforts will be made to promote the availability of these kits which include placing notices in utility bills, links on the City website and displaying the kits at public events. Since this measure will be implemented for all customer classes, it counts as three WUE measures for the City's program.

Water Bill Showing Consumption History

The City is currently updating its utility billing system. Once complete, the City will evaluate the ability to add consumption history charts and information on water bills. If implemented, this will count as three additional WUE measures for the City's program.

Water Use Efficiency Program Schedule and Budget

The WUE measures described above and selected for implementation by the City are summarized in **Table 3** with their corresponding schedule and budget. The successful implementation of this program is expected to achieve a 5 percent water use reduction by the year 2019 and an 8 percent water use reduction by the year 2029, as shown in **Chart 1**.

Table 3
WUE Program Schedule and Budget

Water Use Efficiency Measure	Schedule	Budget
Mandatory Measures		
Source Meters	Ongoing	O&M Funded
Service Meters	Ongoing	O&M Funded
Meter Calibration	Ongoing	O&M Funded
Water Loss Control Action Plan/Leak Detection	2010-2012	$6,000/yr
Customer Education - Annual Consumer Confidence Report	Ongoing	$500/yr
Measures That Must be Evaluated		
Rate Structure[1]	2010	$40,000
Reclamation Opportunities	2014/2022	Sewer CIP Funded
Selected Measures		
Customer Education - School Outreach, Brochures, etc.	Ongoing	$1,000/yr
Indoor Conservation Kits	2013-2029	$2,000/yr
Outdoor Conservation Kits	2013-2029	$1,500/yr
Water Bill Showing Consumption History	Not Determined at this Time	

1 = Rate structure budget reflects water rate study cost.

Chart 1
WUE Program Projected Water Savings

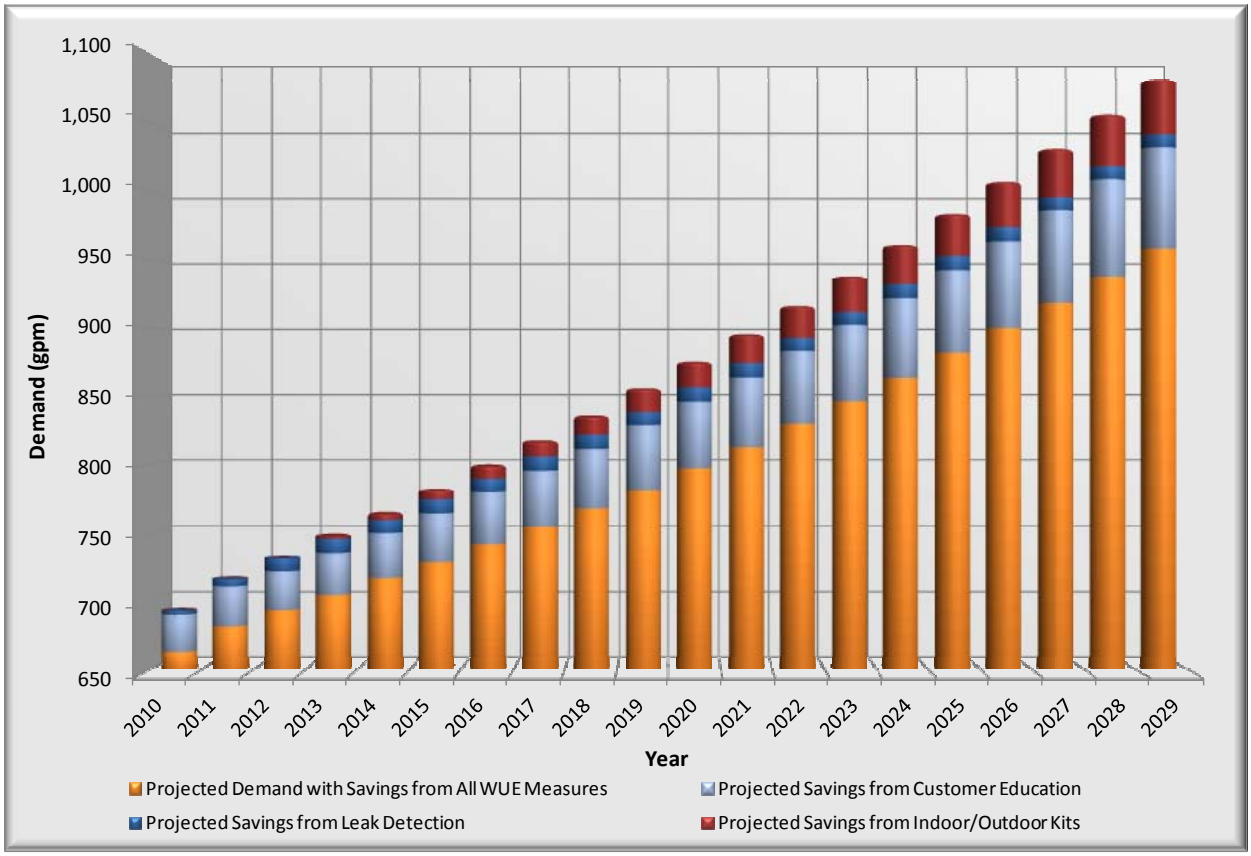

Water Use Efficiency Program Evaluation and Reporting

The City will continue to evaluate overall demand, per capita and per ERU water use, and the amount of DSL on an annual basis. The City will evaluate the performance of its WUE program and implemented measures by analyzing demand data and determining the long-term trend towards reducing water usage per ERU and meeting WUE goals. If the program monitoring shows that progress towards meeting the WUE goals is not being accomplished, more rigorous program implementation or additional program items will be considered, along with a cost-effective evaluation of measures.

The City will continue to provide annual WUE performance reports to its consumers in the Consumer Confidence Report, and will detail the results of water use monitoring and progress towards achieving the system's WUE goals. A copy of the City's 2009 CCR is included in **Appendix L** of the City's WSP.

APPENDIX G

CROSS-CONNECTION CONTROL PROGRAM

Cross-Connection Control Program

INTRODUCTION

A cross-connection control (CCC) program is a proactive and ongoing effort of a water purveyor to protect the health of its customers by preventing contamination of the municipal water supply that it supplies by preventing backflow of contaminants through cross connection. A cross connection is any physical connection, actual or potential, between a water system and any source of non-potable substance. All public water systems in Washington State are required to implement a cross connection control program. All required elements of a local CCC program must be documented and included in either the Comprehensive Water System Plan (applicable to the City of Stanwood) or Small Water System Management Program document (not applicable). The State mandate for a CCC program and the required elements of a CCC program are contained in WAC 246-290-490 Cross-Connection Control, which became effective in April of 1999. The minimum required elements in a CCC program are as follows.

- An adopted local ordinance, resolution or code that establishes the purveyor's legal authority and describes operating policies and the corrective actions of a CCC program.
- Develop and implement procedures and schedules for evaluating new and existing service connections to assess hazards.
- Develop and implement procedures and schedules that eliminate or control cross connections and ensure approved backflow preventers are properly installed.
- Ensure that personnel, including one certified Cross-Connection Control Specialist (CCS), are provided to develop and implement the CCC program.
- Develop and implement procedures to ensure approved backflow preventers are properly inspected and tested.
- Develop and implement a backflow prevention assembly testing quality control assurance program.
- Develop and implement procedures for backflow incident response.
- Include CCC program information in customer education materials.
- Develop and maintain CCC program records.
- Meet any additional CCC requirements if reclaimed water is distributed or received in the water service area.

PURPOSE AND SCOPE

This document establishes minimum standards for the City of Stanwood (City) to protect the public water supply from possible contamination from backflow. This document also describes minimum CCC program operating policies and provides guidelines for installation, testing and maintenance of approved backflow devices. In addition, permitting and inspection requirements for existing and

new backflow prevention devices are described. The document concludes with recommendations the City is advised to address to comply with the updated CCC program requirements.

AUTHORITY

The Federal Safe Drinking Water Act of 1974 and the statutes of the State of Washington RCW Title 43 require purveyors to protect the public water systems from contamination. In addition, WAC 246-290-490 establishes cross-connection control program requirements for the State. In Washington State, the Department of Health (DOH) and the Department of Community, Trade and Economic Development are the lead agencies for the development and administration of the State's CCC program. The City has an adopted cross-connection control ordinance in Chapter 12.18, Water Utility Regulations of the City's Municipal Code. This code establishes the City's authority in implementing a cross-connection control program and prohibits cross connections.

RESPONSIBILITY

The City is responsible for protecting its public water supply from contamination due to backflow of pollutants through water service connections. If the City determines that a backflow prevention device is necessary at a customer's premise, the City will notify the customer to install an approved backflow device. Installation of said backflow device(s) shall be a condition of continued water service from the City. Upon installation, the customer shall notify the City requesting inspection and testing of said device(s). The customer will be responsible for all applicable testing and inspection fees.

FAILURE TO COMPLY

Any person, firm or corporation who violates any of the provisions of this document or Stanwood Municipal Code Chapter 12.18, may be punished in accordance with the Stanwood Municipal Code. Any person, firm or corporation who violates any provisions and requirements of this document shall be subject to discontinuance of supply of City water to the premise. Discontinuance of the City's potable supply to the premise shall remain in effect until corrective action, as required by the City, is completed, tested and approved.

CROSS-CONNECTION CONTROL PROGRAM

The City has implemented the required elements of the CCC program as listed above. This document describes the City's current CCC program and also discusses program elements that the City needs to continue. The City is committed to protecting the public water supply from contamination by eliminating potential cross connections. The City's CCC program that follows includes a statement of its goals and objectives, the evaluation of CCC elements, the program implementation schedule and recommendations.

CCC Program Goals and Objectives

The goals and objectives of the City's CCC Program consist of:

- Prevent contamination of the public water supply by eliminating cross connections;
- Inventory all potential cross-connection hazard areas; and
- Establish an inspection and maintenance program for all backflow prevention devices.

The City will achieve these goals and objectives through the implementation of the CCC program that follows.

Evaluation of CCC Program Elements

The City is required to develop and implement a cross-connection control program. All required elements of a local CCC program must be documented and included in the City's Comprehensive Water System Plan. The evaluation of these CCC program elements and current level of implementation are presented below.

Cross-Connection Control Ordinance

This CCC program element requires that the purveyor "adopt a local ordinance, resolution, code, bylaw, or other written legal instrument" outlining the purveyor's program. In addition, this document must establish the purveyor's legal authority to implement a CCC program. Operating policies, technical provisions and corrective actions of the CCC program must also be addressed in the legal document. Ordinance Number 721 was passed by the City to authorize the CCC program described in Chapter 12.18 of the City's Municipal Code. This section establishes the City's authority to implement a cross-connection program and prohibits cross connections.

In addition, the American Water Works Association (AWWA) published a manual entitled *Recommended Practice for Backflow Prevention and Cross-Connection Control* (AWWA M14) that outlines cross-connection control procedures that is recommended by the WAC requirements as a tool for developing a CCC program. This manual specifically lists types of backflow devices that should be used for different premises. Stanwood's Municipal Code currently references the AWWA document as part of its CCC program.

Evaluation of Service Connections

This CCC program element requires that the purveyor develop and implement procedures for evaluating existing and new service connections to assess the risk of connecting the consumer's premises to the purveyor's public water system. This element also requires that the purveyor notify the consumer within a reasonable timeframe of the evaluation results. New connections are required to be evaluated prior to service. Existing connections shall be inspected on a schedule acceptable to DOH.

The City has an established procedure for evaluating new service connections for potential cross connection. This risk assessment evaluation is performed during the building permit process for

new water service applicants. If a backflow device is required as a result of this evaluation, the device, owner's name, property address and other pertinent information is recorded on a list that is filed at the City's Public Works facility.

The City has performed a system-wide risk assessment of all existing non-residential service connections. Connections that have been determined to be high risk cross-connection hazards are required to be tested annually. The City tracks this through their Cross Track BMI program. High risk cross-connection hazard customers are sent out notices when their testing is due and are required to return test results to the City.

A system-wide risk assessment for all existing residential service connections was begun in summer 2009 and is anticipated to be completed in 2010. A sample letter that was sent to residential customers and a questionnaire form for determining the potential for cross connection hazards is included in **Appendix A**. A reevaluation is conducted through the building permit process to verify if the change in use of the premises requires a change in risk for a cross connection.

Table 1 lists standard abbreviations for backflow prevention devices. These abbreviations will be used in the tables that follow.

Table 1
Abbreviations

Abbreviation	Description	Level of Protection
AG	Air Gap	1
RPBA	Reduced Pressure Backflow Assembly	2
RPDA	Reduced Pressure Detector Assembly	2
DCVA	Double Check Valve Assembly	3
DCDA	Double Check Detector Assembly	3
PVBA	Pressure Vacuum Breaker Assembly	4
AVB	Atmospheric Vacuum Breaker	5

Table 2 shows typical premises located within a water service area and the appropriate backflow device necessary to prevent contamination to the public water system.

Table 2
Premises Requiring Mandatory Service Protection

Premises	Protection	Premises	Protection
Beverage Bottling Plants	RPBA	Nursing Homes	RPBA
Car Washes	RPBA	Petroleum Processing or Storage Plants	RPBA
Chemical Plants	RPBA	Piers and Docks	RPBA
Fire Sprinkler Services	DCVA	Radioactive Material Processing Plants or Nuclear Reactors	RPBA
Food Processing Plants	DCVA		
Sewage Lift Stations	RPBA	Hospitals, Medical Centers and Clinics	RPBA
Sewage Pump Stations	RPBA	Sewage Treatment Plants	RPBA
Laboratories	RPBA	Tall Buildings (Over 30', Domestic Water)	DCVA
Metal Plating Industries	RPBA	Unapproved Auxiliary Supply	RPBA
Mortuaries	RPBA		

Table 3 shows various facilities and the minimum level of required protection for each facility. **Table 4** lists fixtures, equipment, and areas that have the potential to contaminate the public drinking water system. **Table 4** also shows the minimum protection required by the City to prevent such contamination. These tables are referenced by the City during the risk assessment for each premises.

Table 3
Facilities Requiring Backflow Protection

Facilities	Protection	Facilities	Protection
Battery Manufacturing or Repair Facilities	RPBA	Film Processing Facilities	RPBA
Boat Marinas	RPBA	Ice Manufacturing Plants	RPBA
Canneries	DCVA	Mobile Home Parks	DCVA
Cold Storage Plants	RPBA	Packing Houses (Slaughter Houses)	RPBA
Commercial Laundries	RPBA	Paper Product Plants	RPBA
Concrete Mixing Plants	DCVA	Parks and Playgrounds	DCVA
Dairies	DCVA	Plasma Centers	RPBA
Dry Cleaners	RPBA	Sand and Gravel Plants	DCVA
Dry Docks	RPBA	Ship Repair Facilities	RPBA
Farms	DCVA	Shopping Centers	DCVA

Table 4
Fixtures, Equipment and Areas with Backflow Potential

Fixtures, Equipment and Areas	Protection	Fixtures, Equipment Areas	Protection
Air Compressors	DCVA	Janitor Sinks	AVB
Air Conditioning Systems	RPBA	Kitchen Equipment	AVB
Air Washers	RPBA	Laboratory Equipment	RPBA
Aquarium Make-Up Water	AG/RPBA	Laundry Machines, Commercial	RPBA
Aspirators, Medical	AVB	Lavatories	AVB
Aspirators, Vault Drain	RPBA	Livestock Drinking Tanks	DCVA
Aspirators, Weedicide/Herbicide/Pesticide	RPBA	Make-Up Tanks	AG/RPBA
Autoclaves	RPBA	Mobile Carpet Cleaners	RPBA
Autopsy Tables	RPBA	Mop Sinks	AVB
Baptismal Fountain	RPBA,AG/AVB	Outboard Motor Test Tanks	AG/RPBA
Bathtub, Below Rim Filler	Not Allowed	Perchlorethylene Reclaim	AG/RPBA
Bedpan Washers	RPBA	Pesticide Applicator Trucks	AG/RPBA
Beverage Dispensers using C02	RPBA	Photo Developing Tanks and Sinks	RPBA
Bidets	AVB/AG-Internal	Photostat Equipment	RPBA
Boat Lifts	RPBA	Pipette Washers	AVB
Boiler Feed Lines	AG/RPBA	Potato Peelers	AVB
Bottle Washing Equipment	RPBA	Poultry Feeders	RPBA
Box Hydrants	DCVA	Private Hydrants	DCVA
Brine Tanks	AG/DCVA	Processing Tanks	AG/RPBA
Can Washing Equipment	RPBA	Pump Seal Water	AG/RPBA
Chemical Feeder Tanks	AG/RPBA	Pumps, Pneumatic Ejector	RPBA
Chilled Water Systems	RPBA	Pump Prime Lines	RPBA/DCVA
Chlorinators	RPBA	Pumps, Water Operated Ejector	RPBA
Coffee Urns	AG/AVB	Radiator Flushing Equipment	RPBA
Computer Cooling Lines	AG/RPBA	Recreational Vehicle Dump Stations	RPBA
Condensate Tanks	AG/RPBA	Serrated Faucets	AVB
Cooking Kettles	AG/AVB	Service Sinks	AVB
Cooling Towers	AG/RPBA	Sewer Connected Equipment	AG
Decorative Ponds	AG/RPBA	Sewer Flushing	AG
Degreasing Equipment	RPBA	Shampoo Basins/Hose Rinse	AVB
Demineralized Water System	RPBA	Showers, Telephone	AVB
Dental Cuspidors	RPBA	Sitz Baths	AVB
Detergent Dispensers (Dishwasher)	AVB	Soap Mixing Tanks	AG/RPBA
Dialysis Equipment	RPBA	Solar Heating Systems	RPBA
Dishwashers	AVB	Solution Tanks	AG/RPBA
Drinking Fountains	AG	Spas	AG/RPBA
Dye Vats and Tanks	AG/RPBA	Specimen Tanks	AG/RPBA
Dynamometers	DCVA	Starch Tanks	AG/RPBA
Emergency Generators	RPBA	Steam Cleaners	RPBA
Etching Tanks	AG/RPBA	Steam Ejectors	RPBA
Fermenting Tanks	AG/RPBA	Steam Generating Facilities	RPBA
Fertilizer Injection Equipment	RPBA	Sterilizers	RPBA
Film Processors	RPBA	Stills	RPBA
Fire Department Connections w/o chemicals	DCVA/DCDA	Stream-Air Sprays	RPBA
Fire Department Connections with chemicals	RPBA/RPDA	Sumps	AG
Fire Sprinkler Systems w/o chemicals	DCVA/DCDA	Swimming Pools	AG/RPBA
Fire Sprinkler Systems with chemicals	RPBA/RPDA	Toilets (Internal)	AG
Floor Drains	AG	Trap Primers	AG
Flushing Floor Drains	AVB	Ultrasonic Baths	AG

Continued on Next Page

Table 4 (continued)
Fixtures, Equipment and Areas with Backflow Potential

Fixtures, Equipment and Areas	Protection	Fixtures, Equipment Areas	Protection
Table Continued			
Foamite Systems	RPBA/RPDA	Urinals (Internal)	AG
Fountains, Ornamental	AG/RPBA	Used Water Systems	RPBA
Fume Hoods	RPBA	Vats	AG/RPBA
Garbage Can Washers	RPBA	Washing Pools	AG/RPBA
Garbage Disposals	RPBA	Wall Hydrants	AVB
Heat Exchangers	RPBA	Wash Basins	AG/AVB
Heat Pumps	RPBA	Wash-Up Sinks	AG/AVB
High Pressure Washers w/o chemicals	DCVA	Wash Tanks	AG/RPBA
High Pressure Washers with chemicals	RPBA	Wastewater Lines	AG
Hose Bibs	AVB	Water-Air Sprays	DCVA
Hoses, Kitchen Rinse	AVB	Water Closets (Internal)	AG
Hot Tubs	AG/RPBA	Water Cooled Equipment	RPBA
Hot Water Heating Systems	RPBA	Water Ejectors	RPBA
Hot Water Boilers	RPBA	Water Recirculating Systems	DCVA
Humidifier Tanks and Boxes	AG	Water Settling	RPBA
Hydraulically Operated Equipment	RPBA	Water Treatment Tanks	AG/RPBA
Hydrotherapy Baths	RPBA	Water Trucks	AG/DCVA
Ice Makers	RPBA	Wet Vacuum Systems	RPBA
Industrial Fluid Systems	RPBA	Whirlpool Baths	AVB/DCVA
Interties (Looped) Water Systems	DCVA	Windshield Washer Fluid Aspirators	RPBA
Irrigation Systems w/o chemicals	DCVA	X-Ray Processors	RPBA
Irrigation Systems with chemicals	RPBA		

Table 5 summarizes the number of each type of backflow prevention assembly protecting the City's distribution system as of June 2009.

Table 5
Summary of Backflow Prevention Assemblies

Type of Device	Quantity
AG	0
RPBA	43
DCVA	75
PVBA	0
SVB	0
AVB	0
Other	0

Cross-Connection Control and Elimination

This CCC program element requires that the purveyor eliminate existing cross connections wherever possible. If elimination is not possible, then approved backflow devices should be properly installed to eliminate the risk of contamination.

The City endeavors to eliminate potential cross connections where possible. The City does not allow any potential cross connection unless it is protected by an approved backflow device for which a permit has been issued. Backflow devices are inspected to ensure they are installed in the manner for which they were approved. Owners shall be responsible for following the provisions of the City's CCC program. In addition, owners shall be responsible for the elimination or protection of all cross connections on their premises. The City maintains an inventory of existing backflow devices that it currently operates, maintains and inspects. This inventory includes all devices on customers' premises that are the responsibility of the customer to maintain. This inventory is on file at the Public Works facility and is updated as necessary.

Personnel Certification

WAC 246-290-490 requires that personnel, including one certified Cross-Connection Control Specialist (CCS), are provided by the purveyor to develop and implement a CCC program. Ms. Gina Melander, Utility Water Treatment Plant Operator, is certified as a Cross-Connection Control Specialist. The City will continue to provide properly certified personnel to implement the CCC program. The City has the properly certified staff to implement and maintain a CCC program as outlined by the State.

Backflow Device Inspection and Testing

DOH requires that all backflow devices are routinely inspected and tested by certified personnel. Inspections are required at the time of installation, annually thereafter, after a backflow incident, and/or after the assembly is repaired, reinstalled or relocated.

The City is responsible for maintaining those devices that are installed on the public water distribution system, not including those devices installed after a meter on private premises. For devices installed on customers' premises, the customer shall contact the City requesting inspection and testing of said devices. The customer is subject to all applicable inspection and testing fees as may be established. On new installations, the City: 1) provides an on-site evaluation and/or inspection of plans to determine the type of backflow device, if any, that will be required; 2) issues permits; and 3) performs inspection. For existing premises, the City performs evaluations and inspections of plans and/or premises and informs owners by letter of any corrective action deemed necessary, the method of achieving the correction and the time allowed for the correction to be made. Ordinarily, corrections must be made within 60 days; however, the City may shorten this time period depending on the degree of hazard involved and the history of the device(s) in question. The City then inspects the premises on or after the expiration date of the required action to correct a cross connection. If found to not be in compliance with the City's request, the owner receives written notice that water service to the premises will be discontinued. If the owner informs the City of extenuating circumstances as to why the correction has not been completed within five working days of receipt of the notice of termination, the City may grant a time extension up to, but not exceeding, 30 days.

Inspection and testing of devices shall be done: 1) during the initial installation; 2) during on-site

reviews of existing installations; 3) after any repairs or maintenance; 4) after any relocation; and 5) on an annual basis. When an initial installation or annual test indicates that a backflow device is not functioning properly, the owner shall correct the malfunction within five working days as directed by the City. The owner shall contact the City after correcting the problem for re-inspecting and testing of the device(s).

The owner shall be responsible for the payment of all fees for permits, annual or semi-annual device inspection/testing, re-testing if the device fails to operate correctly and any re-inspections for non-compliance with City requirements. The fee for a backflow device permit shall be the same as the fee for a plumbing permit as specified in the Stanwood Municipal Code.

The City maintains records of backflow device inspections at the Public Works facility. Sample letters to customers regarding backflow device testing and inspection are included in **Appendix A**.

Testing Quality Control Assurance Program

This program element requires development and implementation of a quality control assurance program for the testing of backflow prevention devices. Successful implementation of this program element assures that all backflow prevention devices are tested in a similar manner and kept in optimal condition.

The City shall ensure that all testing procedures are completed in a consistent manner. Only certified personnel shall be utilized to test backflow devices. Testing shall be recorded on the proper forms and maintained at the Public Works facility. Examples of testing forms can be found in the AWWA *Recommended Practice for Backflow Prevention and Cross-Connection Control* manual. Personnel shall be trained as outlined by the State, fulfilling all necessary requirements in order to comply with WAC 246-290-490.

Testing personnel shall adhere to the following steps: 1) use only properly operating and calibrated gauge equipment; 2) follow proper field test procedures; 3) consult the manufacturer's repair and maintenance manual when disassembly is required; 4) use only original manufacturer spare parts; and 5) retest the backflow device immediately after repair or maintenance.

In addition to the above steps, the following testing procedures shall be performed by a certified test personnel: 1) advise the customer of an impending test/inspection so that the customer's staff may participate; 2) notify the fire department when shut down of a fire service is necessary; 3) flush residential dirt through test cocks before attaching test gauges; 4) ensure that the high and low pressure bypass hoses of the test kit are connected to the proper test cocks (open test cocks slowly when bleeding air through the bypass hoses); 5) test gauges shall be properly calibrated by a certified testing agency; and 6) assemblies should be tested before the warranty expiration date. For further testing details, refer to the AWWA manual.

Incident Response

This CCC program element requires that the purveyor develop a backflow incident response plan. The following paragraph outlines the City's response to a backflow incident. Other emergency response procedures are included in the *City of Stanwood Emergency Response Plan.*

Emergency Condition: **Water System Contamination Due to a Backflow Incident**

Impact on System: Potentially major impact. Water not suitable for potable use - loss of supply.

Emergency Response:

1. Notify the City CCS personnel of the incident.
2. Shut down the affected mains if possible to contain the affected contaminants.
3. Notify DOH of the backflow incident.
4. Notify all customers of the problem and instruct them to boil all water to be used for consumption and cooking or issue a no-drinking warning.
5. Flush affected water mains to remove contaminants.
6. Disinfect reservoirs and water mains, as necessary, to remove contaminated residuals.
7. Analyze water quality in other parts of the distribution system to ensure that all contaminants were contained.

This document and the *City of Stanwood Emergency Response Plan* outlines procedures to be followed if an emergency arises. When a cross-connection control emergency is called into the Stanwood Police Department or other emergency responder during non-business hours, the responder will notify the Public Works Department on-call person. This person assesses the emergency and notifies any water division personnel as deemed necessary, depending on the severity of the emergency. All emergencies are reported to Mr. Andrew Bullington, Public Works Director, who is responsible for coordinating with water division personnel, as well as other emergency responders, as necessary.

Public Education

Another CCC program requirement is that educational information of the CCC program be included in existing water system materials that are distributed to customers. Educational materials can be included in pamphlets, brochures, bill inserts, public service announcements and consumer confidence reports. The City's Consumer Confidence Report includes information on cross-connection control and tips for preventing cross connections.

Recordkeeping

Purveyors must also develop and maintain records of their CCC program, as mandated by DOH. At a minimum, purveyors must maintain the following records:

- Master list of service connections and/or premises where backflow devices are protecting the public water system;
- Assessed hazard level of each backflow device;

- Inventory information on approved air gaps, including location, degree of hazard, installation date, inspection history, inspection results and personnel conducting inspections;
- Backflow inventory information, including location, assembly description, installation date, inspection history, test and repair history, test results and inspecting personnel;
- Atmospheric Vacuum Breaker (AVB) inventory, including location, description, installation date, inspection history and inspecting personnel; and
- Program summary and backflow incident reports.

The City currently maintains these records at the Public Works facility to allow access by water system personnel.

Reclaimed Water Requirements

The final CCC program requirement is for systems that distribute or receive reclaimed water within their water service area. For these systems, additional cross-connection control requirements may be imposed by DOH in any permits issued in accordance with Chapter 90.46 RCW. The City currently does not distribute or receive reclaimed water within its service area; therefore, these requirements are not applicable. However, if reclaimed water is used in the future, the City will follow all requirements of the permits issued under Chapter 90.46 RCW.

PROGRAM IMPLEMENTATION AND RECOMMENDATIONS

The City's CCC program is an on-going effort that requires staffing and resources to ensure its effectiveness in protecting the quality of drinking water in the distribution system. The City should continue its inspection practices of the installed approved backflow devices and documenting inspections to comply with the regulatory requirements.

The City currently meets the regulatory requirement of having at least one CCS (cross-connection specialist) within the water division to administer its CCC program. The City is encouraged to continue its active training program in order to comply with these requirements.

APPENDIX H

WATER SYSTEM CONSTRUCTION STANDARDS

CHAPTER 4

4.000 WATER

4.010 General

Any extension of the Stanwood Water System must be approved by the Public Works Department and all extensions must conform to Washington State Department of Health guidelines, North Snohomish County Coordinated Water System Plan, City of Stanwood Comprehensive Water System Plan, and Stanwood Fire Department requirements.

In designing and planning for any development, it is the developer's responsibility to see that adequate water for both domestic use and fire protection is attainable. The developer must show, in the proposed plans, how water will be supplied and whether adequate water pressure and fire flows will be attained in case of fire. A hydraulic analysis of the system will be performed by the City to ensure necessary improvements are being provided.

Anyone who wishes to extend or connect to the City's water system should contact the Public Works Department for a water extension/connection fee estimate. This fee estimate is an estimate of the costs due to the City for a waterline extension or connection.

Prior to the release of any water meters, all Public Works improvements must be completed and approved including granting of right-of-way or easements, and all applicable fees must be paid.

Issuance of building permits for new construction of single family subdivisions shall not occur until final Public Works approval is given. For commercial projects, building permits may be issued upon completion and acceptance of the required fire protection facilities. A construction bond, in accordance with the Stanwood Public Works Standards, will be required for the remaining public works improvements. Certificate of occupancy will not be issued until final Public Works approval is given for all improvements.

4.020 Design Standards

The design of any water extension/connection shall conform to City Standards and any applicable standards set forth herein.

The layout of extensions shall provide for the future continuation and/or "looping" of the existing system as determined by the City.

The General Notes on the following pages shall be included on any plans dealing with water system design.

4.030 Water Main Construction General Notes

1. All workmanship and material shall be in accordance with City of Stanwood standards and the most current copy of the State of Washington Standard

Specifications for Road, Bridge, AWWA Standards, APWA and Municipal Construction.

2. A preconstruction meeting shall be held with the City prior to the start of construction.
3. Water mains shall be ductile iron cement mortar lined thickness Class 52.
4. Gate valves shall be resilient wedge, NRS (Non Rising Stem) with O-ring seals. Valve ends shall be mechanical joint or ANSI flanges. Valves shall conform to AWWA C509 or C515. Gate valves shall be Mueller, M & H, Kennedy, Clow R/W, AVK, or Waterous. Existing valves to be operated by City employees only.
5. Hydrants shall be M & H Reliant Style 929, Mueller Centurion, or Clow F-2500 or Waterous Pacer. Hydrants shall be bagged until system is approved. Hydrants will come complete with Storz adapters.
6. All lines shall be chlorinated and tested in conformance with the above referenced specification (Note 1).
7. All services shall be installed with continuous tracer tape per WSDOT/APWA Standards.
8. Provide traffic control plan(s) as required in accordance with MUTCD.
9. All water mains shall be staked for grades and alignment by an engineering or surveying firm capable of performing such work.
10. All existing cement asbestos pipes shall be handled and disposed of according to State and Federal statutes.
11. Call Underground Locate at 1-800-424-5555 a minimum of 48 hours prior to any excavations.
12. The City will be given 72 hours notice prior to scheduling a shutdown. Where connections require "field verification", connection points will be exposed by contractor and fittings verified 48 hours prior to distributing shutdown notices.
13. At any connection to an existing line where a new valve is not installed, the existing valve must be pressure tested to City standards prior to connection. If an existing valve fails to pass the test, the contractor shall make the necessary provisions to test the new line prior to connection to the existing system or install a new valve.

4.040 Main Line

A. Water mains shall be sized to provide adequate domestic plus fire flow at minimum residual pressure of 20 psi. The quantity of water required shall not be less than as outlined in the Stanwood Comprehensive Water System Plan, unless adequate fire flow requirement calculations are provided. Maximum allowed velocity will be 8 feet per second.

B. The minimum water main size shall be 8 inches diameter as long as fire flow requirements can be met. Larger size mains are required in specific areas outlined in the Stanwood Comprehensive Water System Plan. Nothing shall preclude the City from requiring the installation of a larger sized main in areas not addressed in the

Comprehensive Water System Plan if the City determines a larger size is needed to meet fire protection requirements or provide future service.

C. The City Engineer or designated representative shall determine if soil conditions or other protection measures require bonding or polyethylene encasement.

D. Where practical, mains shall be looped to increase reliability and fire flow capacity. Dead end 8-inch mains shall not be longer than 400 lineal feet unless approved by the Public Works Director or City Engineer.

E. All pipe for water mains shall have flexible gasket joints and shall be Ductile Iron Pipe. Ductile iron pipe shall conform to AWWA C 151 Class 52 and have a cement mortar lining conforming to AWWA C 104. Non-restrained joints shall be push-on type or mechanical joint, conforming to AWWA C 111.

F. All fittings for ductile iron pipe shall be ductile iron fittings conforming to AWWA C 153. All shall be cement mortar lined conforming to AWWA C 104. All fittings shall be connected by flanges or mechanical joints.

G. The minimum cover for all water mains from top of pipe to finish grade shall be 36 inches and the maximum cover shall be 60 inches, unless otherwise approved.

4.050 Connection to Existing Water Main

The developer's engineer shall be responsible for determining the scope of work for connection to existing water mains.

It shall be the Contractor's responsibility to field verify the location and depth of the existing main and the fittings required to make the connections to the existing mains.

4.060 Service Interruption

The contractor shall give the City a minimum of 72 hours notice of any planned connection to an existing pipeline. This includes all cut-ins and live taps. Notice is required so any disruptions to existing services can be scheduled. The City will notify customers involved or affected of the water service interruption. The contractor shall make every effort to schedule water main construction with a minimum interruption of water service. In certain situations, the City may dictate scheduling of water main shutdowns so as not to impose unnecessary shutdowns during specific periods to existing customers.

4.070 Hydrants

A. The lead from the service main to the fire hydrant shall be ductile iron cement mortar lined Class 52 no less than 6 inches in diameter up to 50 feet in length. Over 50 feet in length shall be sized to meet the fire flow requirement.

B. Fire hydrants shall have two, 2½-inch outlets and one 4½ inch pumper port outlet. All outport threads shall be National Standard thread. The valve opening shall be 5¼-inch diameter. The hydrant shall have a positive and automatic barrel drain and shall be of the "safety" or breakaway style. All hydrants shall have Storz fittings. Hydrants shall be M & H Reliant Style 929, Mueller Centurian, Clow F-2500 or Waterous Pacer. All hydrants shall be bagged until system is approved.

C. The Public Works Department and Stanwood Fire Department work together to ensure that adequate hydrant spacing and installation are achieved.

   Unless otherwise required by the governing authority, the following guidelines shall apply for hydrant number and location.

   1. At least one hydrant shall be installed at all intersections.
   2. Hydrant spacing of 600 feet shall be required in all areas servicing single family and duplex residential areas. All single family lots shall be within 300 feet from a fire hydrant, as measured along the path of vehicular access.
   3. Fire hydrants serving any use other than detached single family dwellings or duplex dwelling on individual lots will be located not more than 300 feet on center, and will be located so that at least one hydrant is located within 150 feet of all structures, but not closer than 50 feet, unless approved by the Stanwood Fire Department.
   4. Hydrants located in dead-end areas or cul-de-sacs shall service an area of no more than 120,000 square feet.

D. For requirements regarding use, size and location of a fire department connection (FDC) and/or post indicator valve, contact Stanwood Water Department. Location of FDC shall be shown on water plans.

E. Where needed, the Public Works Department or Stanwood Fire Department may require hydrants to be protected by two or more posts, each 4 inches in diameter by 5 feet in height made of either reinforced concrete or steel.

F. Fire hydrants must be installed, tested, and accepted prior to the issuance of a building permit.

4.080 Valves

All valves and fittings shall be ductile iron with ANSI flanges or mechanical joint ends. All existing valves shall be operated by City employees only.

Valves shall be installed in the distribution system at sufficient intervals to facilitate system repair and maintenance, but in no case shall there be less than one valve every 1000 feet. Generally, there shall be a minimum two valves on each tee and three valves on each cross. Specific requirements for valve spacing will be made at the plan review stage.

A. Gate Valves, 2-inch to 12-inch. The design, materials and workmanship of all gate valves shall conform to AWWA C509 or AWWA C515, latest revision. Gate valves shall be resilient wedge non-rising stem (NRS) with two internal O-ring stem seals. Gate valves shall be Mueller, M & H, Kennedy, Clow R/W, AVK, or Waterous.

   Gate valves shall be used on all 2-inch to 12-inch lines.

B. All valves larger than 12 inches shall be approved as determined by the Public Works Director. Butterfly valves shall be used on all lines 14 inches or larger, unless the line will be flushed with a polypig.

C. Valve Box. All valve boxes shall be cast iron per WSDOT/APWA Standards. In areas where valve box falls in road shoulder, the ditch and shoulder shall be graded before placing asphalt or concrete pad.

D. Valve Marker Post. Valve marker posts shall be 4-inch x 4-inch reinforced concrete or schedule 40 steel posts 5 feet long stamped with "W" and distance to valve. Post shall be painted with 1 base coat and 2 coats white oil base enamel.

4.090 Casing

Steel casing pipe shall be schedule 20 steel or equal. Pipe spacers shall be Calpico Model PX or equal with at least eight runners. Casing pipe and spacers shall be sized for pipe being installed. Install minimum of three spacers per section of pipe. Cap ends with end seals equal to APS Model Wrap Around End Seal.

4.100 Air and Vacuum Release Valve

Air and vacuum release valves (ARV) shall be per WSDOT Standard Plans. Air and vacuum release valve shall be equal to Apco 145C.

The installation shall be set at the high point of all water mains when required. Where possible, pipes are to be graded to prevent the need for an air release valve.

4.110 Blowoff Assembly

Blowoff assemblies shall be set at the low points of all water mains, unless a fire hydrant is located at the low point.

If a fire hydrant is not located at the end of a dead end main, a blowoff assembly shall be required. On water mains which will be extended in the future, the valve which operates the blowoff assembly shall be the same size as the main and provided with a concrete thrust block. The pressure rating for blowoff assemblies shall be 200 psi.

4.120 Sampling Station

A sampling station, per the standard details, shall be installed in all new developments.

4.130 Backflow Prevention

All water system connections to serve buildings or properties with domestic potable water, fire sprinkler systems, or irrigation systems shall comply with the minimum backflow requirements as established by the Snohomish County Health District and the City of Stanwood.

The installation of all backflow devices is required to protect the existing water system and users from possible contamination.

Public Works shall get the certificate for testing of any backflow prevention device before releasing the certificate of occupancy on any building.

The Stanwood Water Department will monitor the test of the fire line and obtain the certificate for underground piping. The fire line portion of the underground piping will not be tested until the Public Works Department has tested and approved their main up to the fire line.

4.140 Service Connection

A. All service connections relating to new development shall be installed and tested by the developer at the time of mainline construction. Testing shall include main and service line up to meter setter. After the lines have been constructed, tested, and approved, the owner may apply for a water meter. The City will install a water meter after the application has been made and all applicable fees have been paid. Water meters will be set only after system is inspected and approved.

B. When water is desired to a parcel fronting an existing main but not served by an existing setter, an application must be made to the City. Upon approval of the application and payment of all applicable fees, the City will tap the main, and install the meter, box, and setter.

C. Service lines shall be 1 inch IPS high density polyethylene pipe, minimum pressure class 200 psi per WSDOT/APWA Standards. No glued joints will be accepted. Service lines shall be installed 22.5 degrees off the main. Tracer tape and fourteen gauge coated copper wire wrapped around the pipe shall be installed on all service lines.

   Service saddle shall be all bronze with stainless steel straps and shall be Romac style 202S or approved equal. All clamps shall have rubber gasket and iron pipe threaded outlets.

   Corporation stop shall be all bronze and shall be Ford type F1101, with ribbed insert brass only or approved equal with iron pipe threads conforming to AWWA C 800. Stainless steel inserts shall be used with pack joints and polyethylene pipe.

D. Master meters will not be allowed for service to more than one per building. An approved backflow prevention system must be installed in conjunction with any master meter.

E. Individual pressure reducing valves shall be installed at all service connections.

4.150 Water Main/Sanitary Sewer Crossings

The contractor shall maintain a minimum of 18 inches of vertical separation between sanitary sewers and water mains. The minimum horizontal separation shall be 10 feet.

The longest standard length of water pipe shall be installed so that the joints will fall equidistant from any sewer crossing. In some cases where minimum separation cannot be maintained, it may be necessary to encase the water pipe and/or sewer service in pipe or concrete. The casing shall extend a minimum of 10 feet on either side of the crossing. No concrete shall be installed unless specifically directed by the City.

4.160 Irrigation

All irrigation systems shall be installed with an approved backflow prevention assembly approved by AWWA and the Snohomish County Health District. The minimum required is a double check valve assembly.

Irrigation sprinklers shall be situated so as to not wet any public street or sidewalk.

4.170 Staking

All surveying and staking shall be performed by an engineering or surveying firm capable of performing such work. The engineer or surveyor directing such work shall be licensed as a Professional Engineer or Professional Land Surveyor by the State of Washington.

A preconstruction meeting shall be held with the City prior to commencing staking. All construction staking shall be inspected by the City prior to construction.

The minimum staking of waterlines shall be as directed by the City Engineer or as follows:

A. Stake centerline alignment every 50 feet with cut or fill to invert of pipe maintaining a minimum cover required over pipe. Cuts are normally not required when road grade has been built to subgrade elevation.

B. Stake alignment of all fire hydrants, tees, water meters, setters and other fixtures and mark cut or fill to hydrant flange finished grade.

4.180 Trench Excavation

A. Clearing and grubbing where required shall be performed within the easement or public right-of-way as permitted by the City and/or governing agencies. Debris resulting from the clearing and grubbing shall be disposed of by the owner or contractor in accordance with the terms of all applicable permits.

B. Trenches shall be excavated to the line and depth designated by the City to provide a minimum of 36-inches of cover over the pipe. Except for unusual circumstances where approved by the City, the trench sides shall be excavated vertically and the trench width shall be excavated only to such widths as are necessary for adequate working space as allowed by the governing agency. The trench shall be kept free from water until joining is complete. Surface water shall be diverted so as not to enter the trench. The owner shall maintain sufficient pumping equipment on the job to insure that these provisions are carried out.

C. The contractor shall perform all excavation of every description and whatever substance encountered and boulders, rocks, roots and other obstructions shall be entirely removed or cut out to the width of the trench and to a depth of 6 inches below water main grade. Where materials are removed from below water main grade, the trench shall be backfilled to grade with material satisfactory to the City and thoroughly compacted.

D. Trenching and shoring operations shall not proceed more than 100 feet in advance of pipe laying without approval of the City, and shall be in conformance with Washington Industrial Safety and health Administration (WISHA) and Office of Safety and Health Administration (OSHA) Safety Standard.

E. The bottom of the trench shall be finished to grade with hand tools in such a manner that the pipe will have bearing along the entire length of the barrel. The bell holes shall be excavated with hand tools to sufficient size to make up the joint.

4.190 Thrust Blocking

Location of thrust blocking shall be shown on plans. Thrust block concrete shall be Class 3000 poured against undisturbed earth. A plastic barrier shall be placed between all thrust blocks and fittings.

4.200 Backfilling

Backfilling and surface restoration shall closely follow installation of pipe so that not more than 100 feet is left exposed during construction hours without approval of the City. Selected import backfill material shall be placed and compacted around and under the water mains by hand tools to a height of 6 inches above the top of the water main. The remaining backfill shall be select material and shall be compacted to 95 percent of the maximum density in traveled areas, 90 percent outside traveled areas. The use of native material for backfill shall only be allowed outside of the road section and as approved by the City. Where governmental agencies other than the City have jurisdiction over roadways, the backfill and compaction shall be done to the satisfaction of the agency having jurisdiction. All trench backfill material placed in any traveled way shall conform with WSDOT/APWA Standards for backfilling the trench.

4.210 Street Patching and Restoration

Requirements regarding street patching and trench restoration shall be per WSDOT/APWA Standards, the Transportation Chapter of these standards, and specific requirements of agency with jurisdiction.

4.220 Hydrostatic Tests

Prior to the acceptance of the work, the installation shall be subjected to a hydrostatic pressure test in accordance with WSDOT/APWA Standards. No main shall be hydrostatically tested until the lines are flushed of chlorine. The main shall be tested between valves. Insofar as possible, no hydrostatic pressure shall be placed against the opposite side of the valve being tested. Test pressure shall be maintained while the entire installation is inspected.

The contractor shall provide all necessary equipment and shall perform all work connected with the tests. Tests shall be made after all connections have been made and the roadway section is constructed to subgrade. This is to include any and all connections as shown on the plan. The contractor shall perform the test to assure that the equipment to be used for the test is adequate and in good operating condition and the air in the line has been released before requesting the City to witness the test.

4.230 Disinfection and Flushing

Disinfection of water mains shall be accomplished by the contractor in accordance with the requirements of WSDOT/APWA Standards and the Snohomish County Health District in a manner satisfactory to the City. At no time shall chlorinated water from a new main be flushed into a body of fresh water. This is to include lakes, rivers, streams, drainage ways, and any and all other waters where fish or other natural water life can be expected.

When a chlorine concentration has been established throughout the line, the valves shall be closed and the line left undisturbed for 24 hours. The line shall then be thoroughly flushed to

a location approved by the City and water samples taken by the City at least 24 hours after flushing and disinfecting for approval by the local health agency. Should the initial treatment result in an unsatisfactory bacteriological test, the original chlorination procedure shall be repeated by the contractor until satisfactory results are obtained. The sample can only be taken on Mondays, Tuesdays, Wednesdays, and Thursdays until noon. Testing and sampling shall take place after all underground utilities are installed and compaction of the roadway section is complete.

Polypigging is required for flushing 12-inch and larger water mains. Mains that are polypigged shall be chlorinated after the pigging process is complete.

CITY OF STANWOOD

WATER SYSTEM STANDARD DETAILS INDEX

STANDARD DETAILS

W–1	⅝" SINGLE METER SERVICE
W–2	⅝" DOUBLE METER SERVICE
W–3	1 ½", 2" METER SERVICE
W–4	3" METER ASSEMBLY
W–5	TYPICAL METER PLACEMENT
W–6	SINGLE SERVICE DOUBLE CHECK VALVE ASSEMBLY W/FDC
W–7	DUAL SERVICE DOUBLE CHECK VALVE ASSEMBLY W/FDC
W–8	FIRE HYDRANT
W–9	TAPPING METHODS
W–10	STANDARD VALVE BOX
W–11	VALVE MARKER POST & HYDRANT BOLLARD DETAIL
W–12	PRESSURE REDUCING STATION
W–13	PRESSURE REDUCING STATION DETAILS
W–13b	PRESSURE RELIEF DISCHARGE PIPING
W–14	WATER SAMPLING STATION
W–15	INDIVIDUAL SERVICE PRESSURE REDUCING VALVE
WSDOT B–11	PIPE ZONE BEDDING AND BACKFILL
WSDOT B–21a	COMBINATION AIR RELEASE / AIR VACUUM VALVE ASSEMBLY
WSDOT B–22	CONCRETE BLOCKING FOR CONVEX VERTICAL BENDS
WSDOT B–22a	CONCRETE THRUST BLOCK
WSDOT B–21	2 INCH BLOWOFF ASSEMBLY

NOTES:

1. STAINLESS STEEL INSERTS REQUIRED FOR ALL PACK JOINTS.
2. ALL SERVICE SADDLES SHALL HAVE RUBBER GASKET AND I.P. THREADS.
3. FITTINGS SHALL BE BRASS.
4. SERVICE MATERIALS SHALL BE PER WSDOT 9-30.6 UNLESS NOTED OTHERWISE.

MATERIALS

SERVICE SADDLE	ROMAC 202S
CORPORATION STOP	FORD F1101
METER BOX SIDEWALKS, TRAFFIC OR LANDSCAPED AREAS	MIDSTATES BCF (APPROX 14"x24")
METER BOX LANDSCAPED AREAS	CARSON 1419-5 (APPROX 12"x17")
METER SETTER	FORD VH72-15W

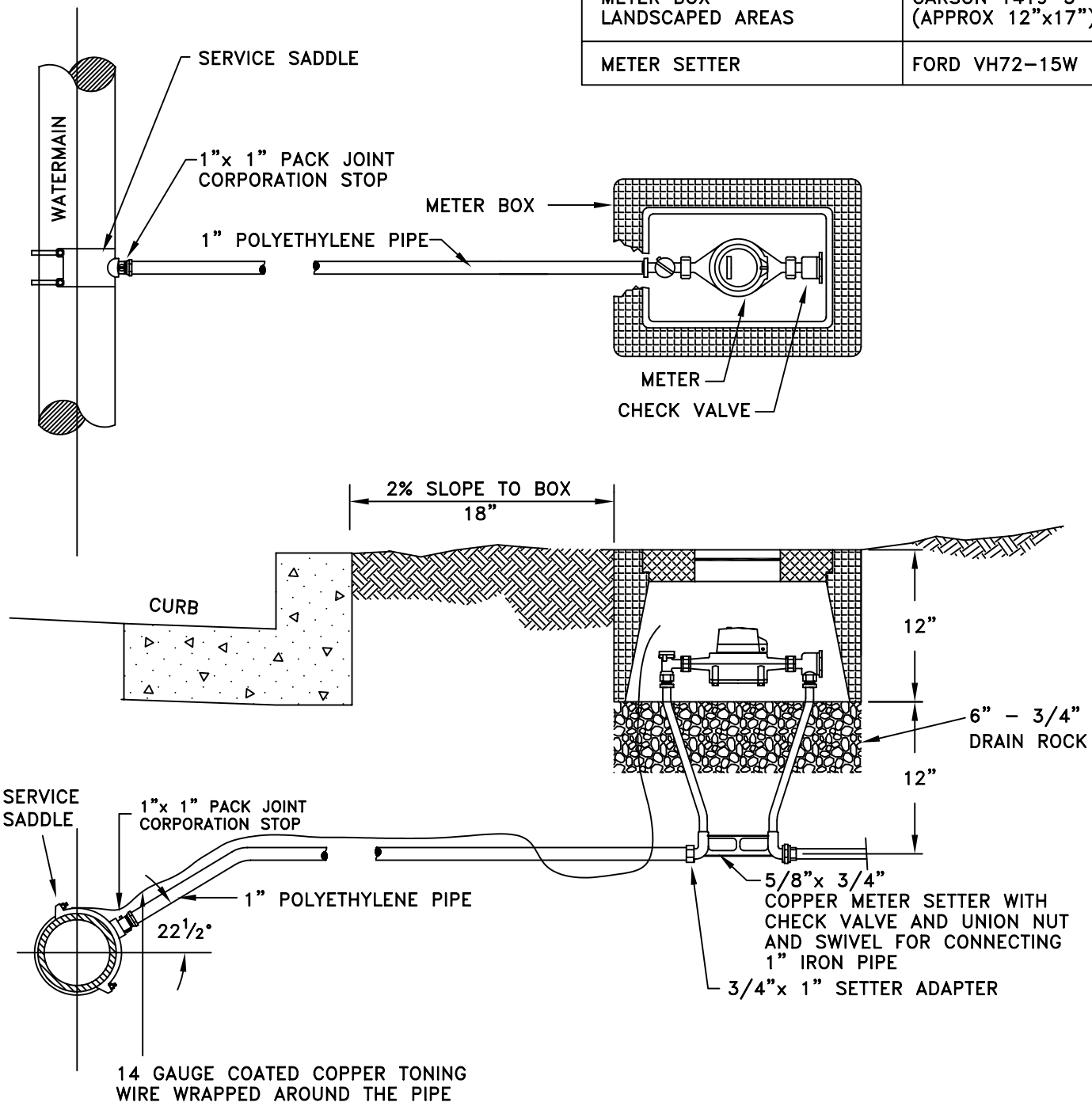

City of Stanwood

WATER SYSTEM STANDARD DETAIL

5/8" SINGLE METER SERVICE

File: STADETW01	Revised: JUL 14, 2006	Printed: JUL 14, 2006	DRAWING NO.	W-1

NOTES:

1. STAINLESS STEEL INSERTS REQUIRED FOR ALL PACK JOINTS.
2. ALL SERVICE SADDLES SHALL HAVE RUBBER GASKET AND I.P. THREADS.
3. FITTINGS SHALL BE BRASS.
4. SERVICE MATERIALS SHALL BE PER WSDOT 9-30.6 UNLESS NOTED OTHERWISE.

MATERIALS

SERVICE SADDLE	ROMAC 202S
CORPORATION STOP	FORD F1101
METER BRANCH	FORD U88-43
METER BOX, SIDEWALKS, TRAFFIC, AND LANDSCAPED AREAS	MID-STATES BCF (APPROX 18"x30")
BALL VALVE	FORD B61-344
METER SETTER	FORD VH72-15W
METER BOX LANDSCAPED AREA	CARSON 1730-5B (20"x32")

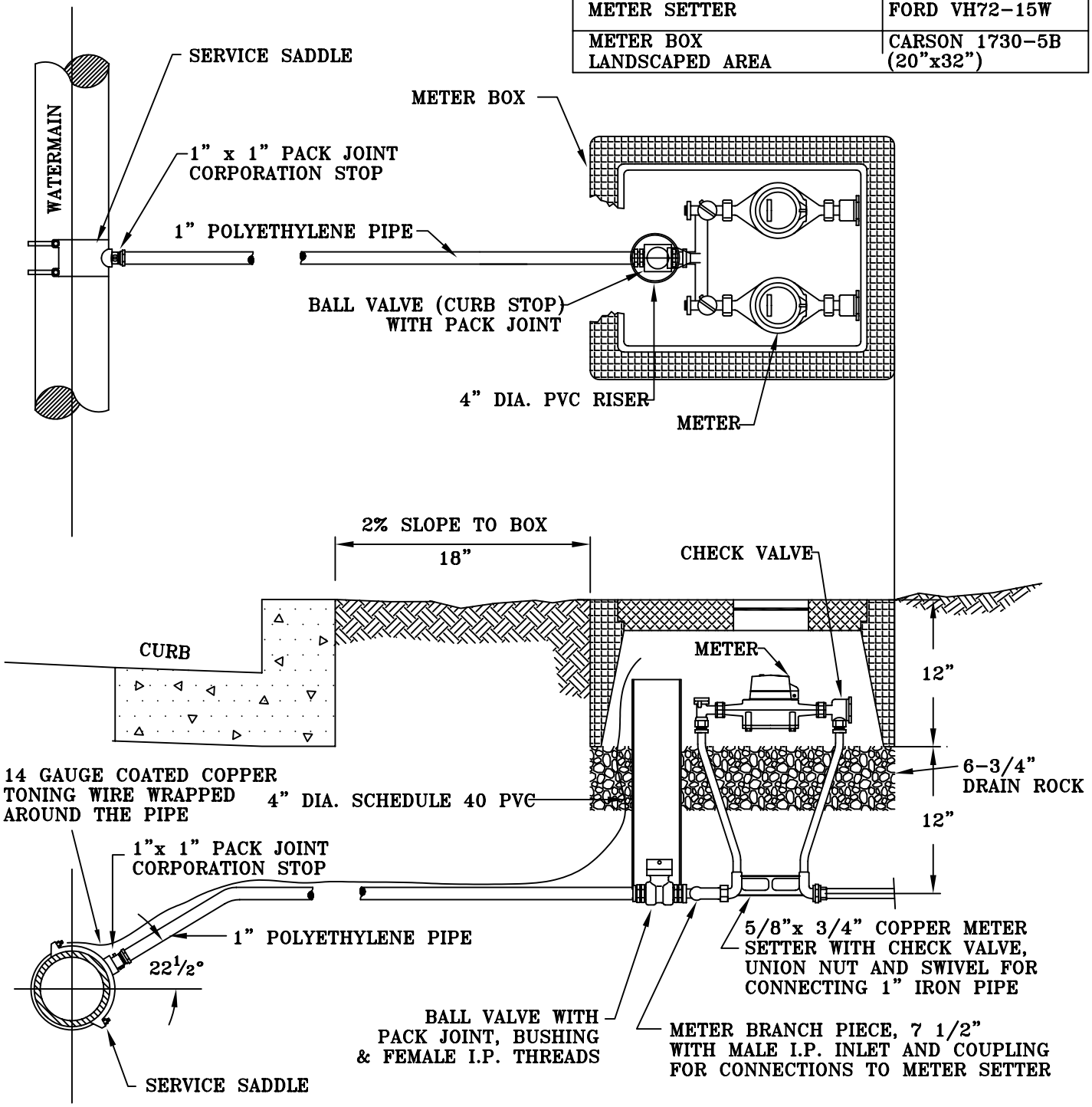

City of Stanwood

WATER SYSTEM STANDARD DETAIL

5/8" DOUBLE METER SERVICE

File: STADETW02	Revised: JUL 14, 2006	Printed: JUL 14, 2006	DRAWING NO.	W-2

NOTES:

1. STAINLESS STEEL INSERTS REQUIRED FOR ALL PACK JOINTS.
2. ALL SERVICE SADDLES SHALL HAVE RUBBER GASKET AND I.P. THREADS.
3. FITTINGS SHALL BE BRASS.
4. SERVICE MATERIALS SHALL BE PER WSDOT 9-30.6 UNLESS NOTED OTHERWISE.

MATERIALS

SERVICE SADDLE	ROMAC 202S
CORPORATION STOP	FORD F1101
METER BOX, SIDEWALKS, TRAFFIC, AND LANDSCAPED AREAS	MID-STATES BCF (APPROX 18"x30")
BALL VALVE	FORD B61-666 OR B61-777
1/2" COPPER SETTER	FORD VH46-15B
2" COPPER SETTER	FORD VH47-18B
METER BOX LANDSCAPED AREA	CARSON 1730-5B (20"x32")

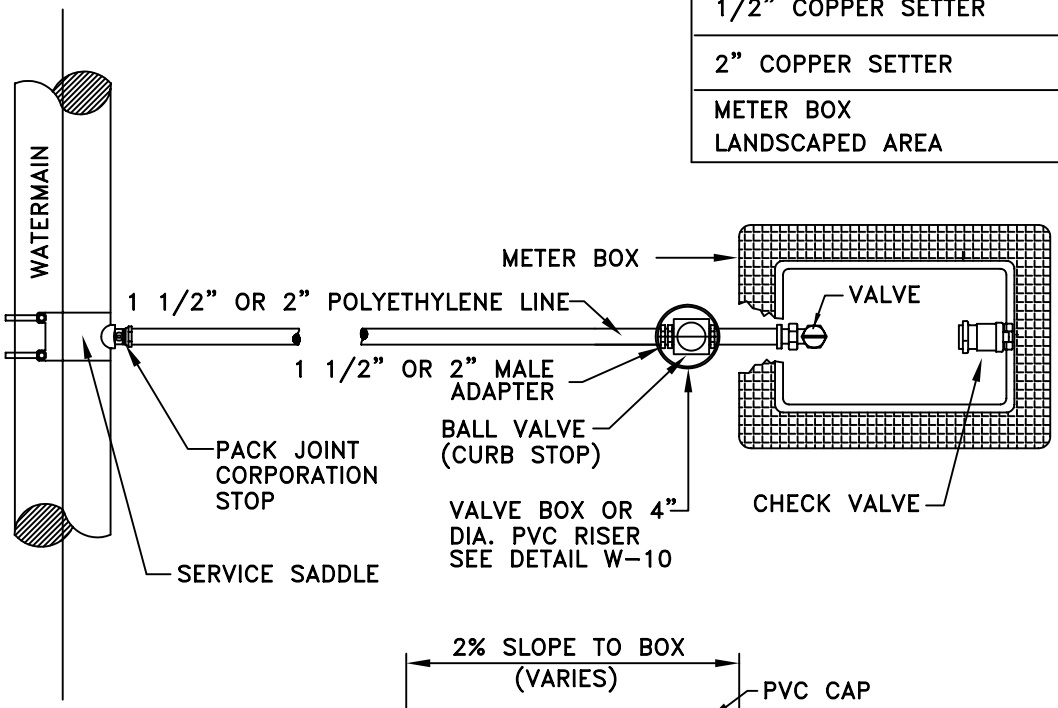

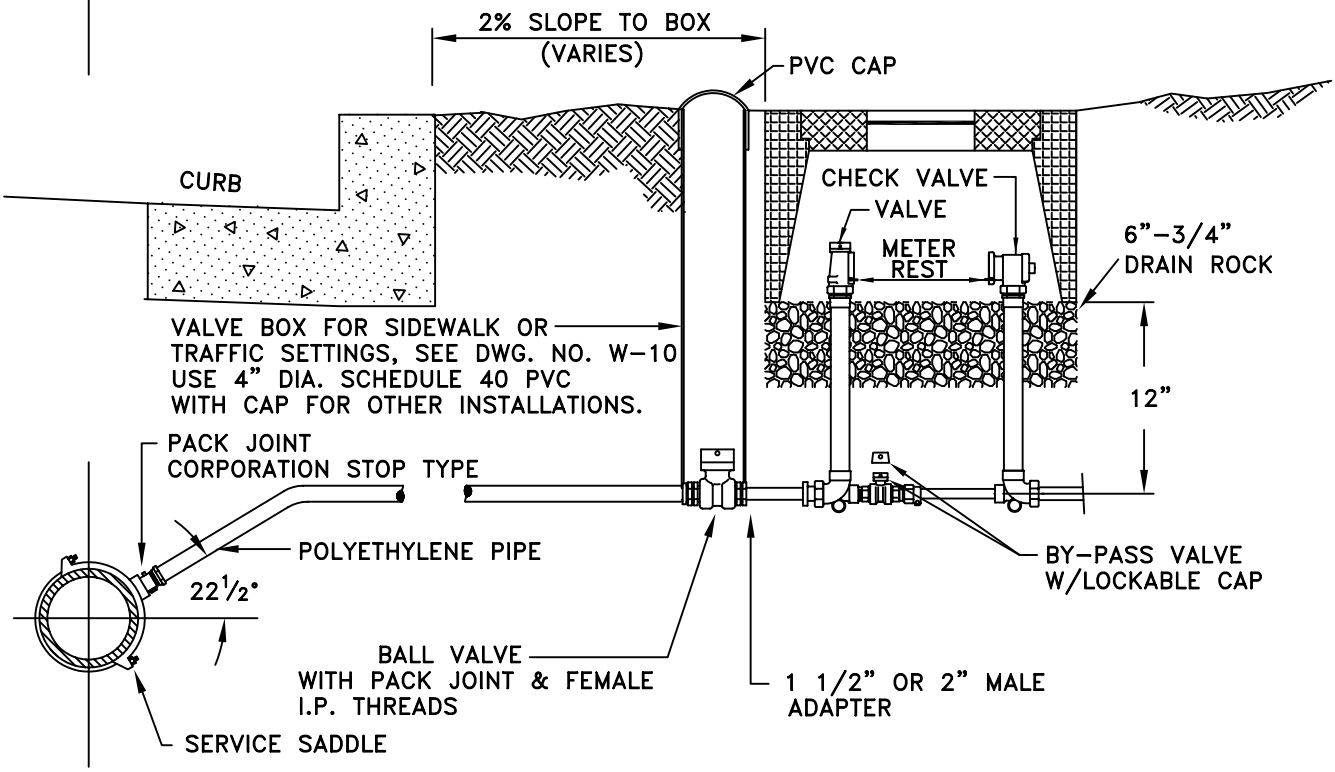

City of Stanwood

WATER SYSTEM STANDARD DETAIL

1½", 2" METER SERVICE

File: STADETW03	Revised: JUL 14, 2006	Printed: JUL 14, 2006	DRAWING NO.	W-3

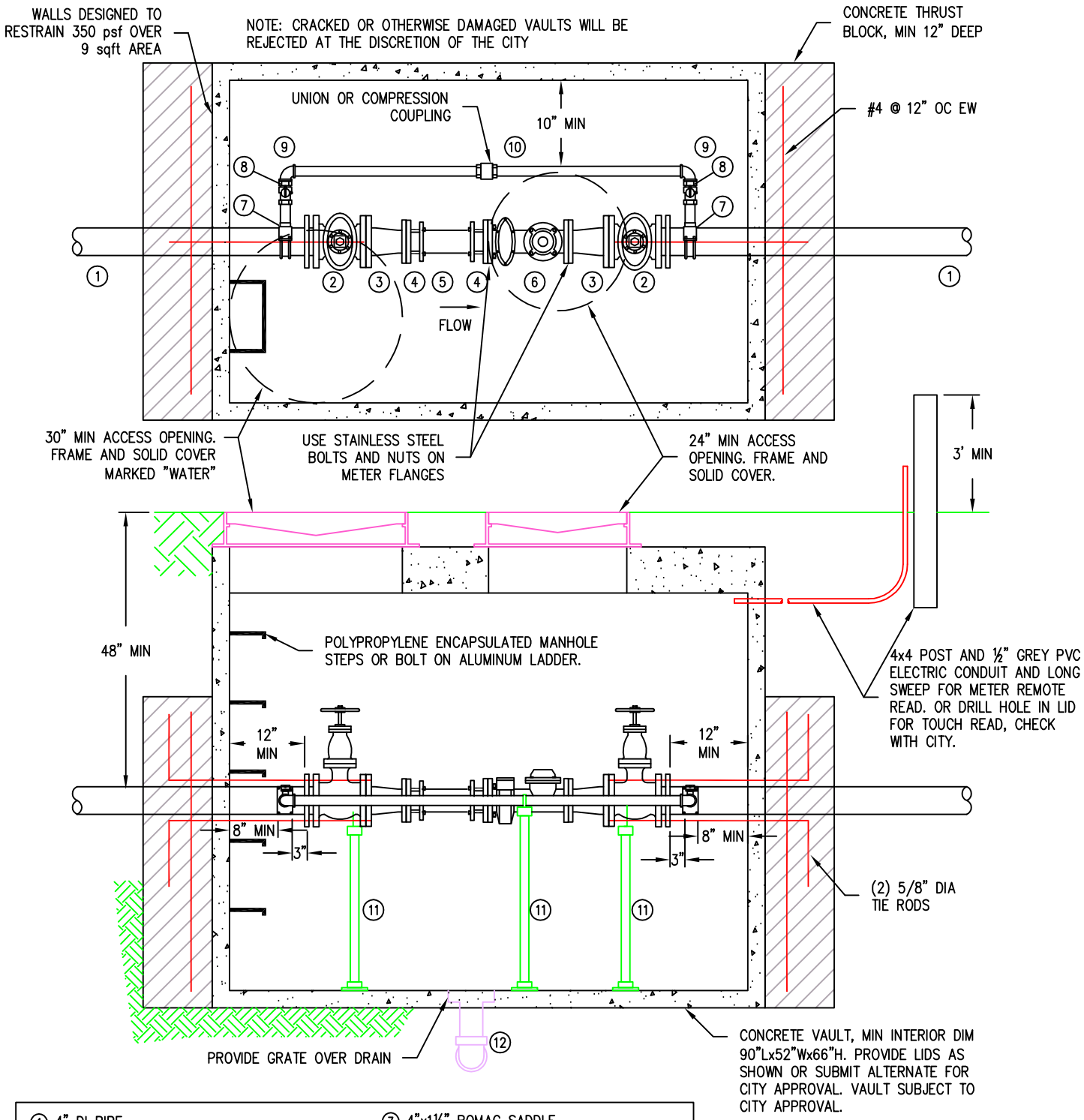

1. 4" DI PIPE
2. 4" RS GATE VALVE (FLxMJ) w/HANDWHEEL
3. 4" x 3" DI REDUCER (FLxFL)
4. 3" FCA, DO NOT "PUSH HOME" PIPE
5. 3" DI PIPE, 12" LENGTH (PExPE)
6. 3" TURBINE METER BY CITY
   NEPTUNE LAY LENGTH 12.0"
   METRON LAY LENGTH 11.8"
   STRAINER (IF REQUIRED BY CITY) 6"
7. 4"x1½" ROMAC SADDLE
8. 1½" BALL VALVE w/PADLOCK WING OR LOCK CAP
9. 1½" BRASS OR GALV 90° BEND
10. 1½" RIGID COPPER OR GALV PIPE
11. STANDON OR GRINNELL PIPE SUPPORT
12. 4" DRAIN PIPE TO DAYLIGHT UNLESS OTHERWISE APPROVED. 1% SLOPE MIN.

PROVIDE SINGLE FLANGED SPOOL BETWEEN GATE VALVES TO ASSURE ALIGNMENT OF INLET AND OUTLET PIPES PRIOR TO INSTALLATION OF METER AND EQUIPMENT.

City of Stanwood

WATER SYSTEM STANDARD DETAIL

3" METER ASSEMBLY

File: STADETW04	Revised: OCT 14, 2003	Printed:OCT 14, 2003	DRAWING NO.	W-4

SINGLE METER BOX PLACEMENT

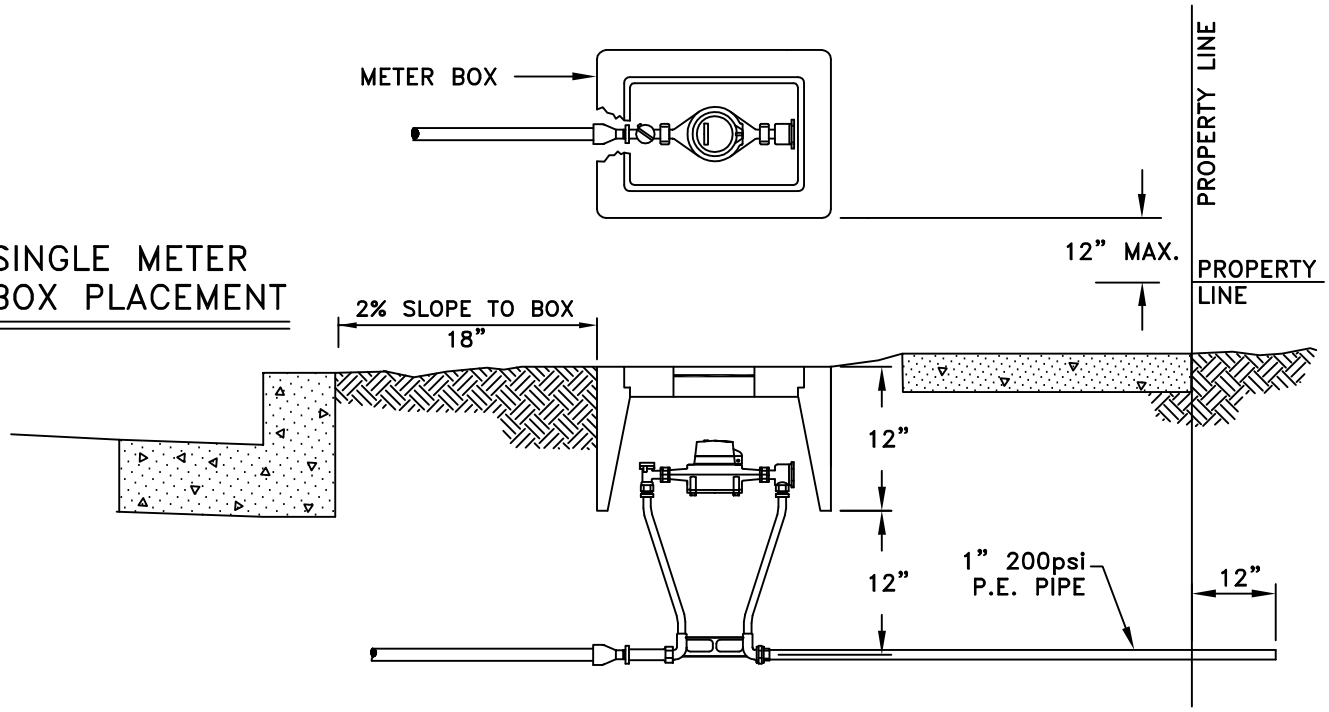

DUAL METER BOX PLACEMENT

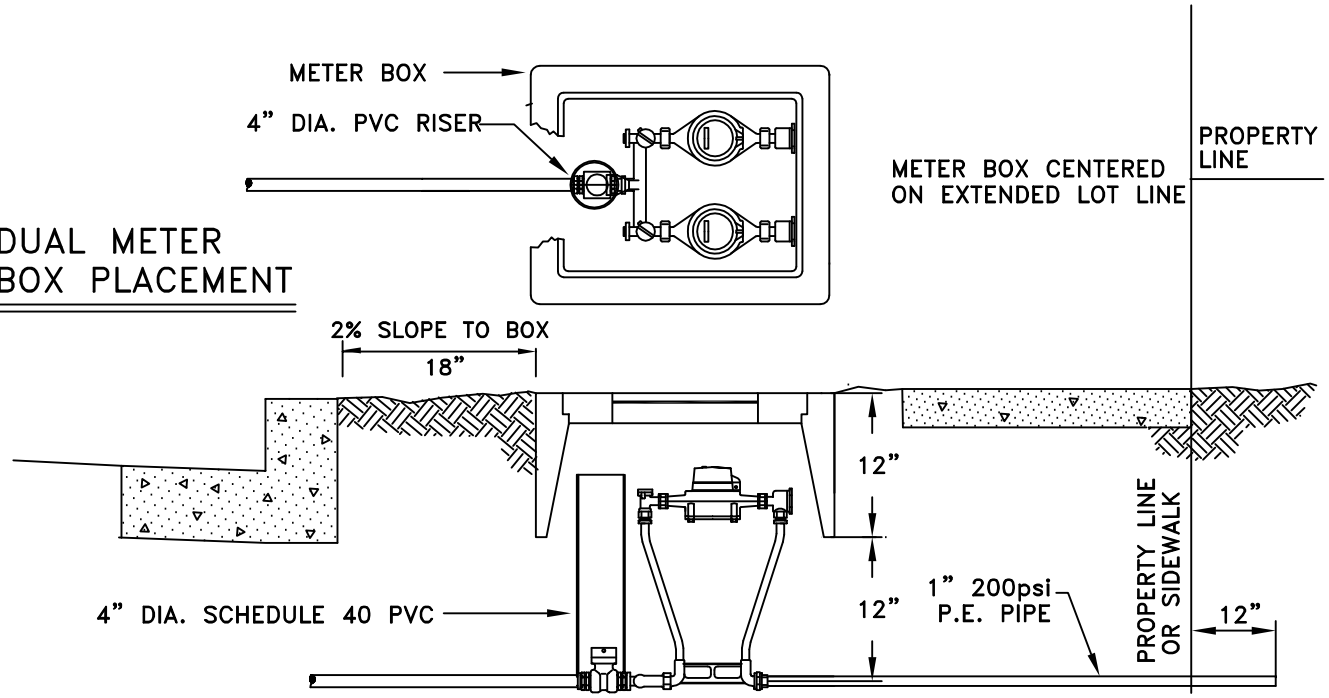

City of Stanwood			WATER SYSTEM STANDARD DETAIL
			TYPICAL METER PLACEMENT
File: STADETW05	Revised: OCT 14, 2003	Printed: OCT 14, 2003	DRAWING NO. W-5

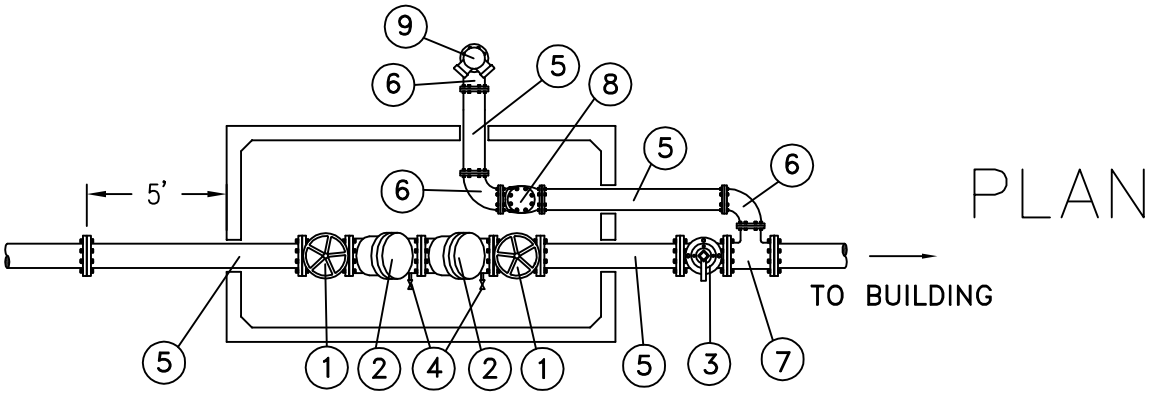

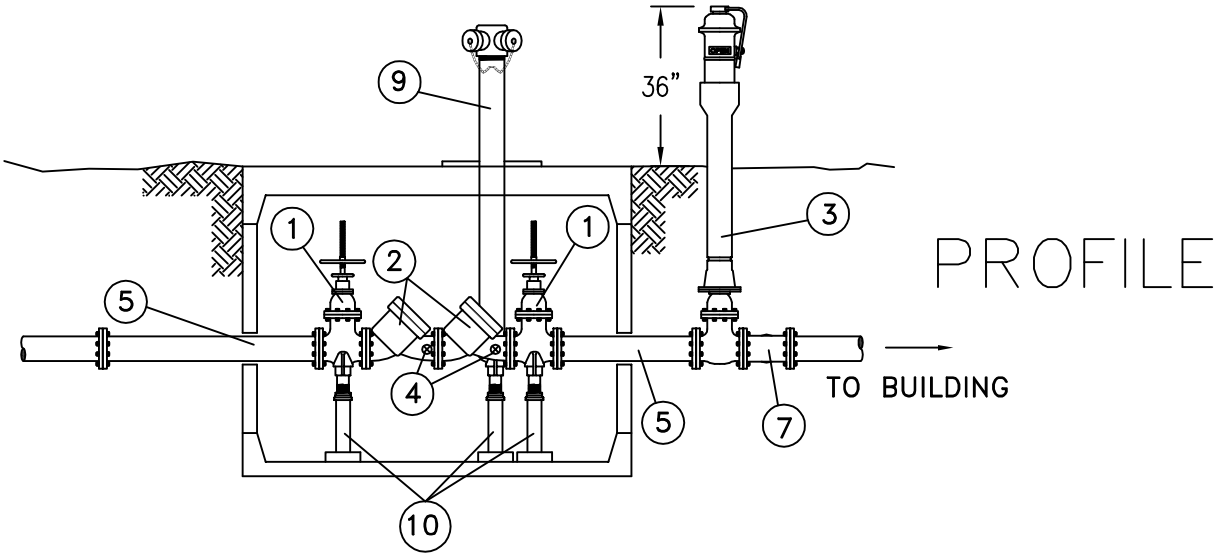

MATERIAL LIST:

1. OS&Y GATE VALVE W/HANDWHEEL FL X FL
2. DOUBLE DETECTOR (DSHS APPROVED) CHECK VALVE FL X FL
3. POST INDICATOR VALVE
4. 3/4" BALL VALVE (TEST COCK)
5. CLASS 52 DI WALL PIPE FL X FL
6. CLASS 52 DI 90° BEND FL X FL
7. CLASS 52 DI TEE FL X FL
8. SWING CHECK VALVE W/BALL DRIP ASSEMBLY
9. FIRE DEPARTMENT CONNECTION
10. VALVE STANDS
11. WHERE PIPING PASSES THROUGH CONCRETE WALL PROVIDE 2" CLEARANCE W/ WATERPROOF MASTIC OR FLEXIBLE SEALANT

GENERAL NOTES:

A. PIPE FROM VAULT TO BUILDING SHALL BE CLASS 52 DI.

B. TAMPER SWITCHES SHALL BE INSTALLED ON 1 AND 3 CONNECTED TO BUILDING FIRE ALARM SYSTEM.

C. INSTALL PLUGS ON ALL TEST COCKS. FINGER TIGHTEN.

D. ALL PIPING SHALL BE A MINIMUM OF 4" DIA. AS PER NFPA13.

FIRE DEPARTMENT CONNECTION

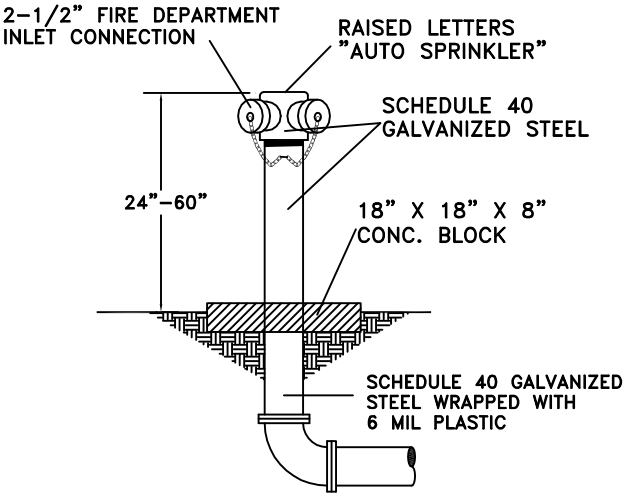

City of Stanwood

WATER SYSTEM STANDARD DETAIL

SINGLE SERVICE DOUBLE CHECK VALVE ASSEMBLY W/FDC

File: STADETW06	Revised: OCT 14, 2003	Printed: OCT 14, 2003	DRAWING NO.	W-6

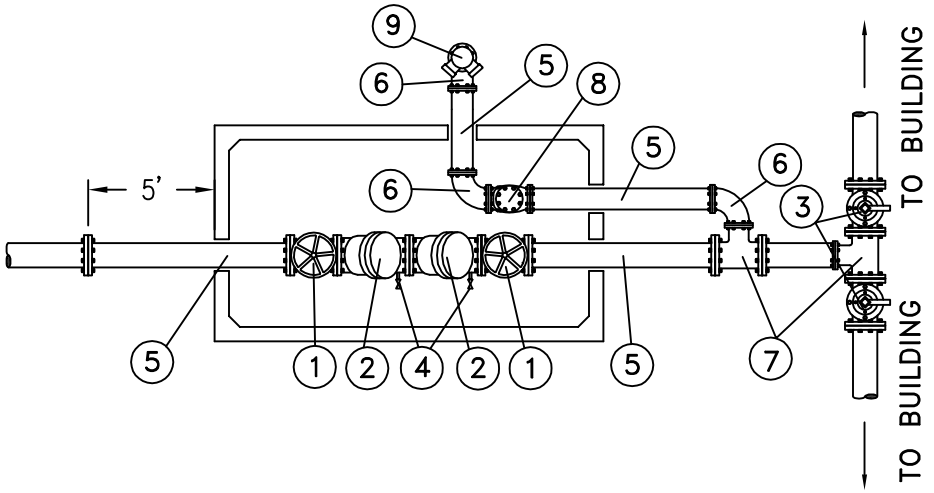

PLAN

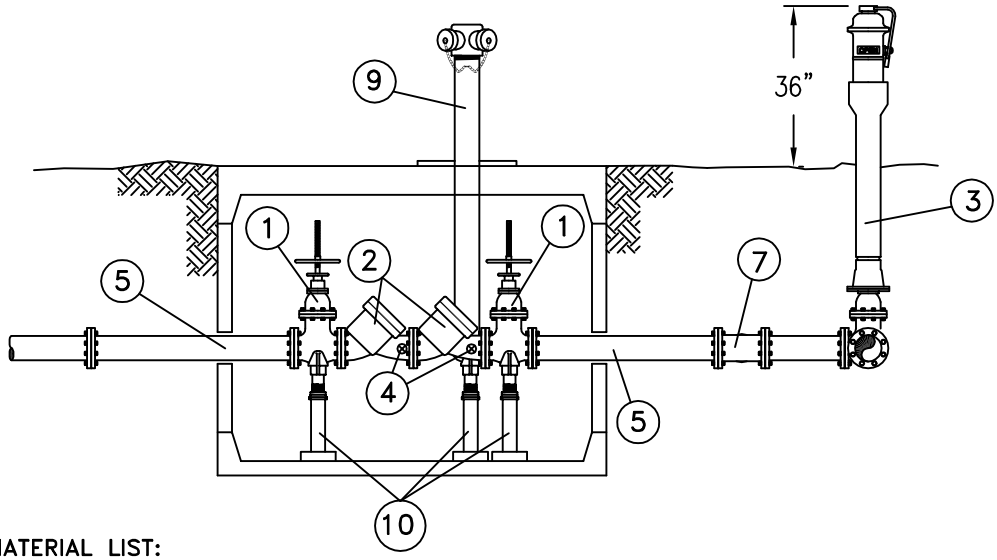

PROFILE

MATERIAL LIST:

1. OS&Y GATE VALVE W/HANDWHEEL FL X FL
2. DOUBLE DETECTOR (DSHS APPROVED) CHECK VALVE FL X FL
3. POST INDICATOR VALVE
4. 3/4" BALL VALVE (TEST COCK)
5. CLASS 52 DI WALL PIPE FL X FL
6. CLASS 52 DI 90° BEND FL X FL
7. CLASS 52 DI TEE FL X FL
8. SWING CHECK VALVE W/BALL DRIP ASSEMBLY
9. FIRE DEPARTMENT CONNECTION
10. VALVE STANDS
11. WHERE PIPING PASSES THROUGH CONCRETE WALL PROVIDE 2" CLEARANCE W/ WATERPROOF MASTIC OR FLEXIBLE SEALANT

GENERAL NOTES:

A. PIPE FROM VAULT TO BUILDING SHALL BE CLASS 52 DI.

B. TAMPER SWITCHES SHALL BE INSTALLED ON 1 AND 3 CONNECTED TO BUILDING FIRE ALARM SYSTEM.

C. INSTALL PLUGS ON ALL TEST COCKS. FINGER TIGHTEN.

D. ALL PIPING SHALL BE A MINIMUM OF 4" DIA. AS PER NFPA13.

FIRE DEPARTMENT CONNECTION

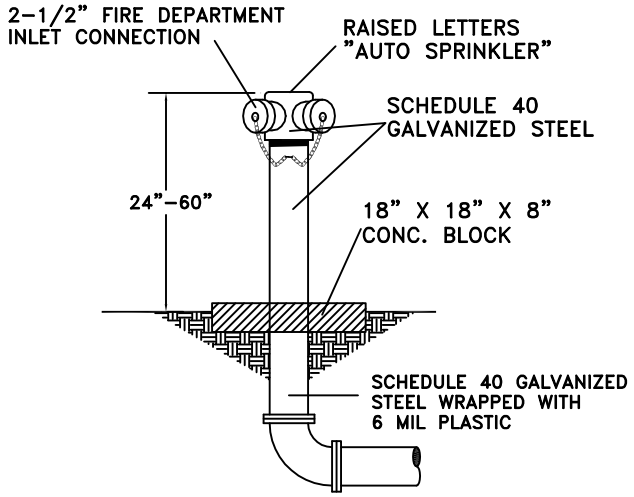

City of Stanwood

WATER SYSTEM STANDARD DETAIL

DUAL SERVICE DOUBLE CHECK VALVE ASSEMBLY W/FDC

File: STADETW07	Revised: OCT 14, 2003	Printed: OCT 14, 2003	DRAWING NO.	W-7

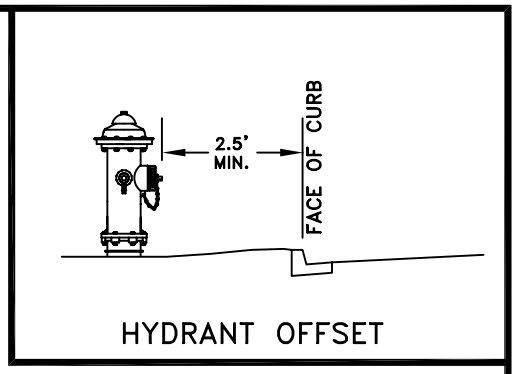

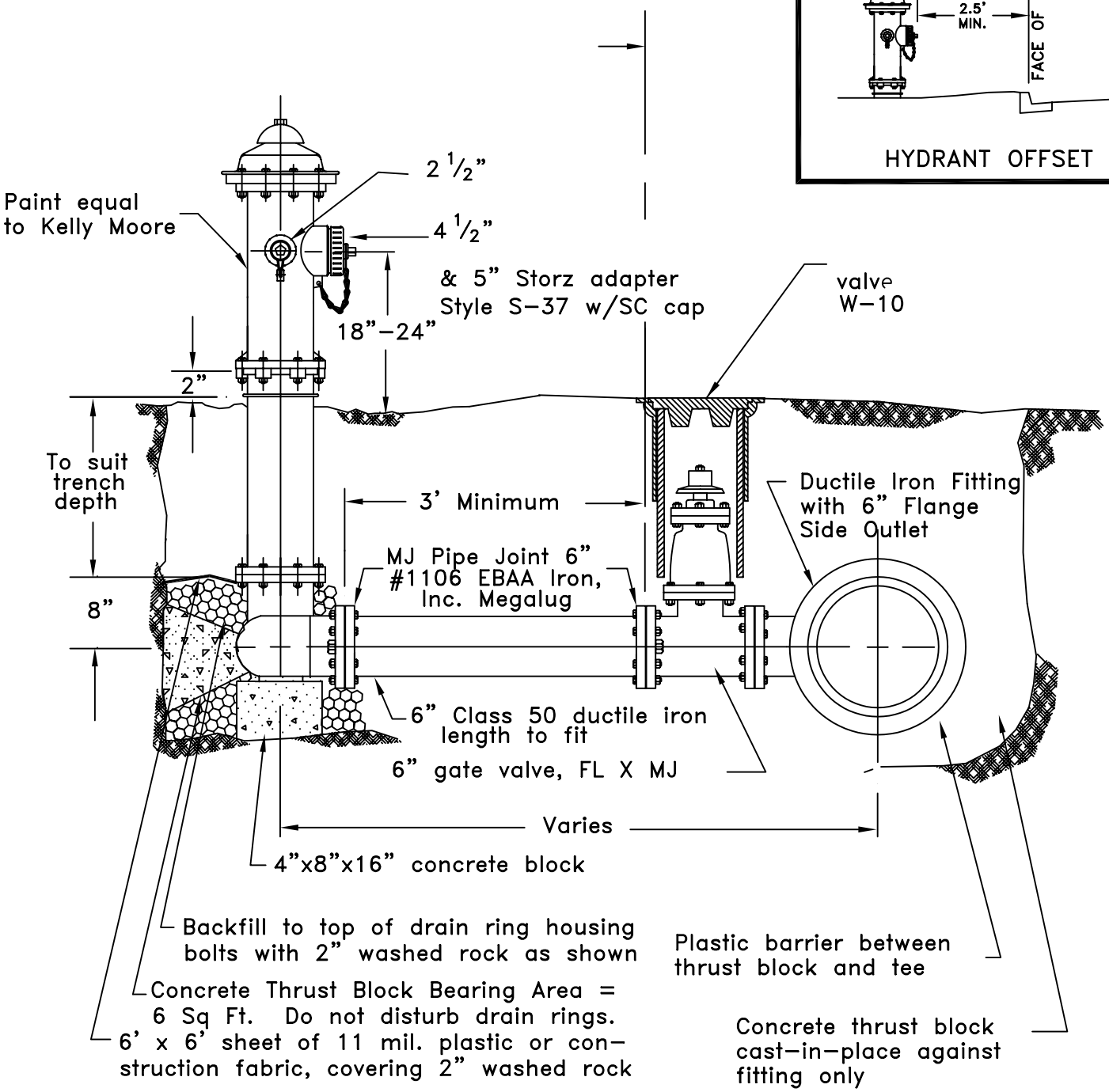

Notes

1. A minimum three foot of radius unobstructed working area shall be provided around all hydrants.
2. Hydrant shall be Waterous Pacer, M & H Reliant style 929, Mueller Centurion, or Clow F-2500.
3. Gate valves shall be resilient wedge NRS with O-ring seals. Valve ends shall be Mechanical joint by ANSI flanges. Valves shall conform to AWWA 509-80. Valves shall be Mueller, M&H, Clow R/W or Waterous Series 500.

City of Stanwood		WATER SYSTEM STANDARD DETAIL	
		FIRE HYDRANT	
File: STADETW08	Revised: JUN 9, 2004	Printed: JUN 9, 2004	DRAWING NO. W-8

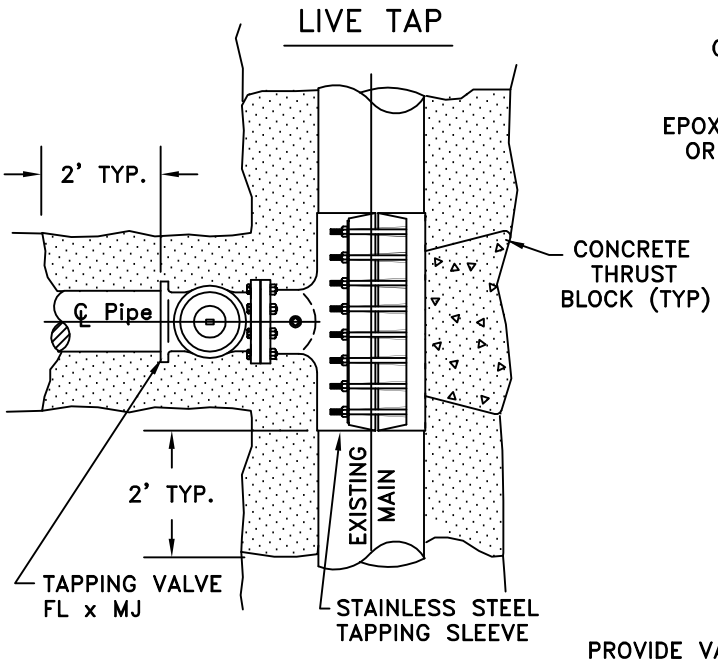

VALVE AND SLEEVE SHALL BE SUPPORTED AND BACKFILLED AS SHOWN BELOW–RIGHT.

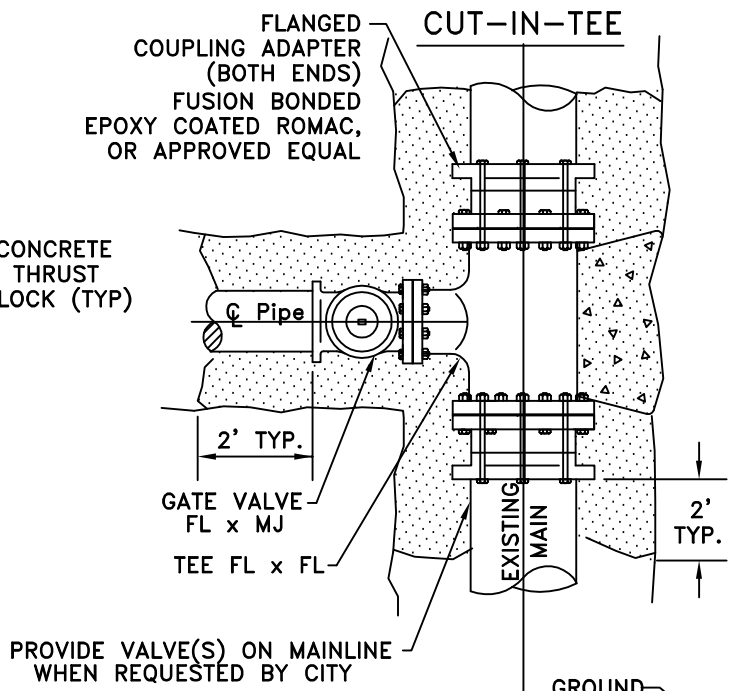

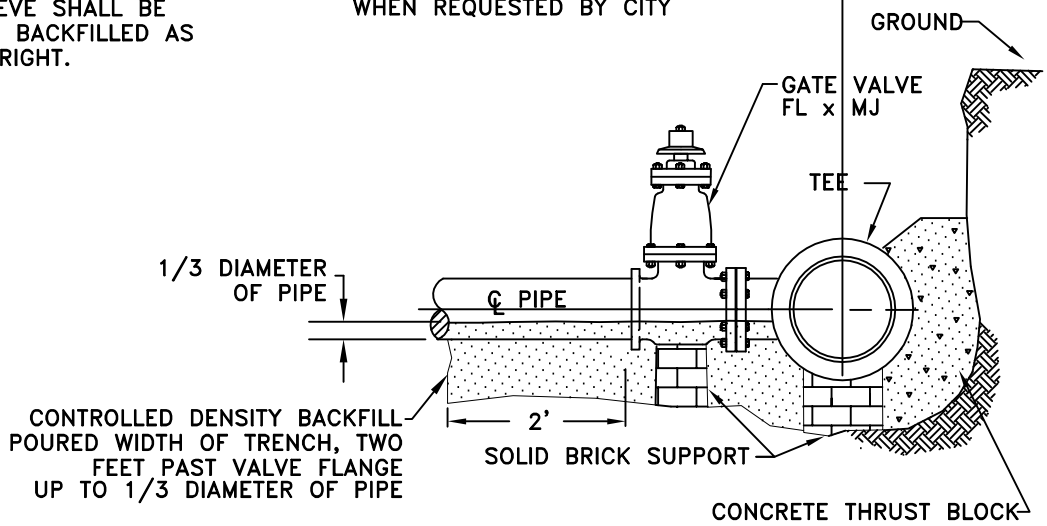

NOTES:

1. 11 MIL PLASTIC OR CONSTRUCTION FABRIC SHALL BE WRAPPED AROUND PIPE AND FITTINGS BEFORE THRUST BLOCK AND BACKFILL ARE POURED.
2. CONTROLLED DENSITY BACKFILL EQUAL TO WSDOT 2–09.3(1)E
3. MJ CUT IN TEES SHALL NOT BE PERMITTED.
4. SUPPORT VALVE AND SLEEVE CONTINUOUSLY THROUGH INSTALLATION.
5. TEST TAPPING SLEEVE PRIOR TO CUTTING EXISTING MAIN.

City of Stanwood		WATER SYSTEM STANDARD DETAIL	
		TAPPING METHODS	
File: STADETW09	Revised: OCT 14, 2003	Printed: OCT 14, 2003	DRAWING NO. W–9

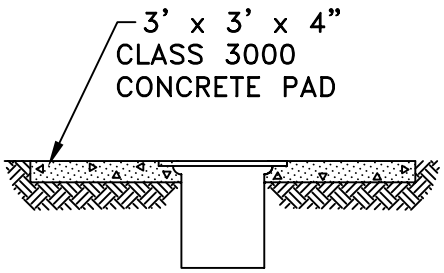

OUTSIDE PAVED AREA

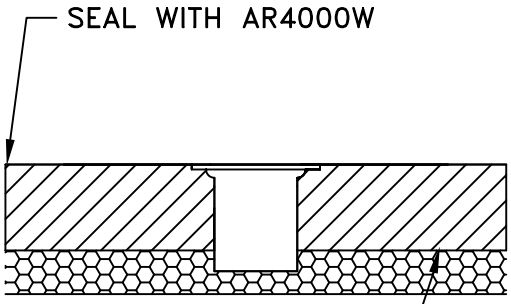

INSIDE PAVED ROADWAY

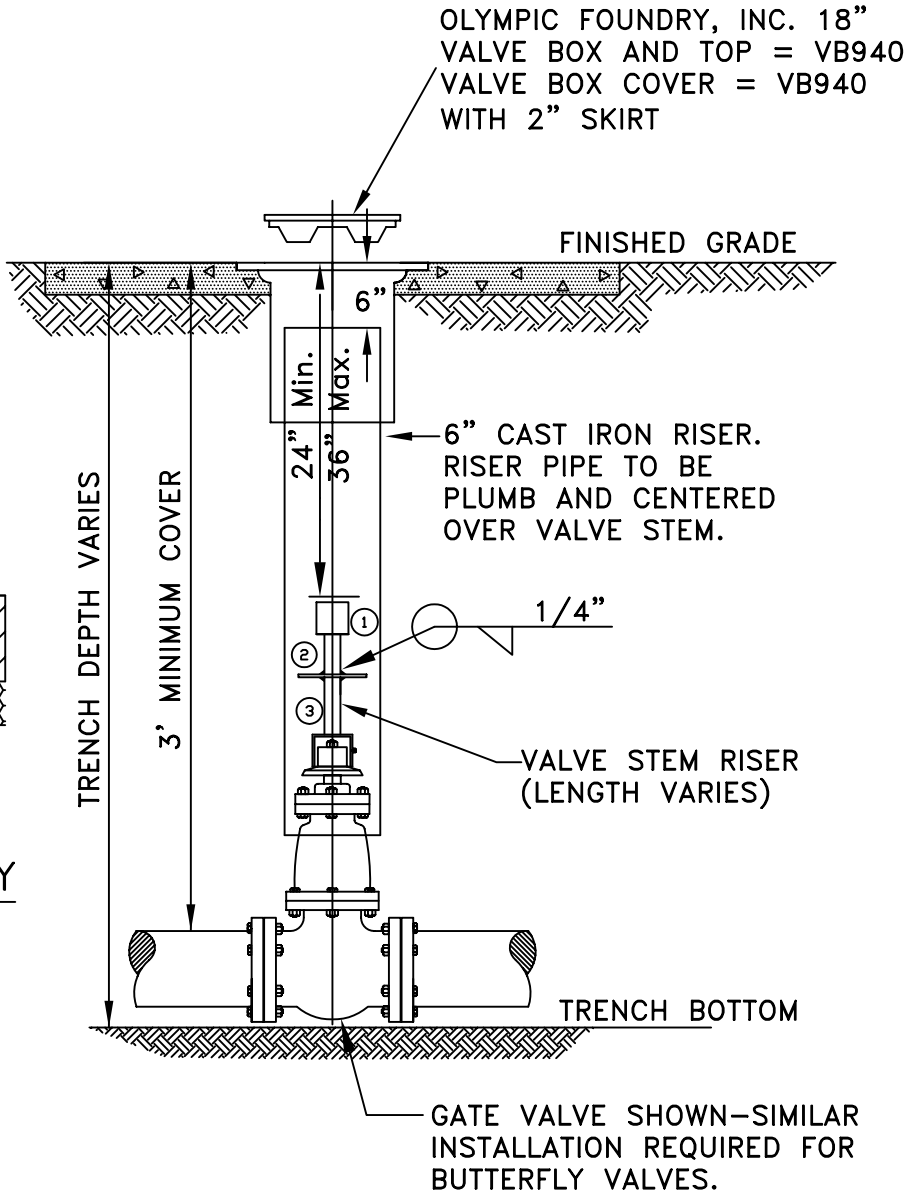

VALVE STEM EXTENSION LEGEND

1. VALVE OPERATING NUT OR 1 7/8" X 1 7/8" X 2" HIGH GRADE STEEL WELDED TO GUIDE PLATE.
2. 3/16" Thk X 5 1/5" DIA STEEL GUIDE PLATE WELDED TO RISER SHAFT.
3. 2"X2"X 3/16" SQUARE STRUCTURAL STEEL TUBING TO FIT OPERATING NUT. LENGTH AS REQUIRED.

NOTE:

ALL WELDS TO SHAFT SHALL BE FILLET WELD ALL AROUND, AS SPECIFIED ABOVE

ALL VALVES CONNECTED TO PVC PIPE MUST HAVE 14 GUAGE COATED COPPER TRACER WIRE TIED OFF AT VALVE BODY, EXTENDED OUTSIDE RISER PIPE THEN EXTENDED ONE FOOT TO TOP OF VALVE BOX

City of Stanwood		WATER SYSTEM STANDARD DETAIL	
		STANDARD VALVE BOX	
File: STADETW10	Revised: JUL 14, 2006	Printed: JUL 14, 2006	DRAWING NO. W–10

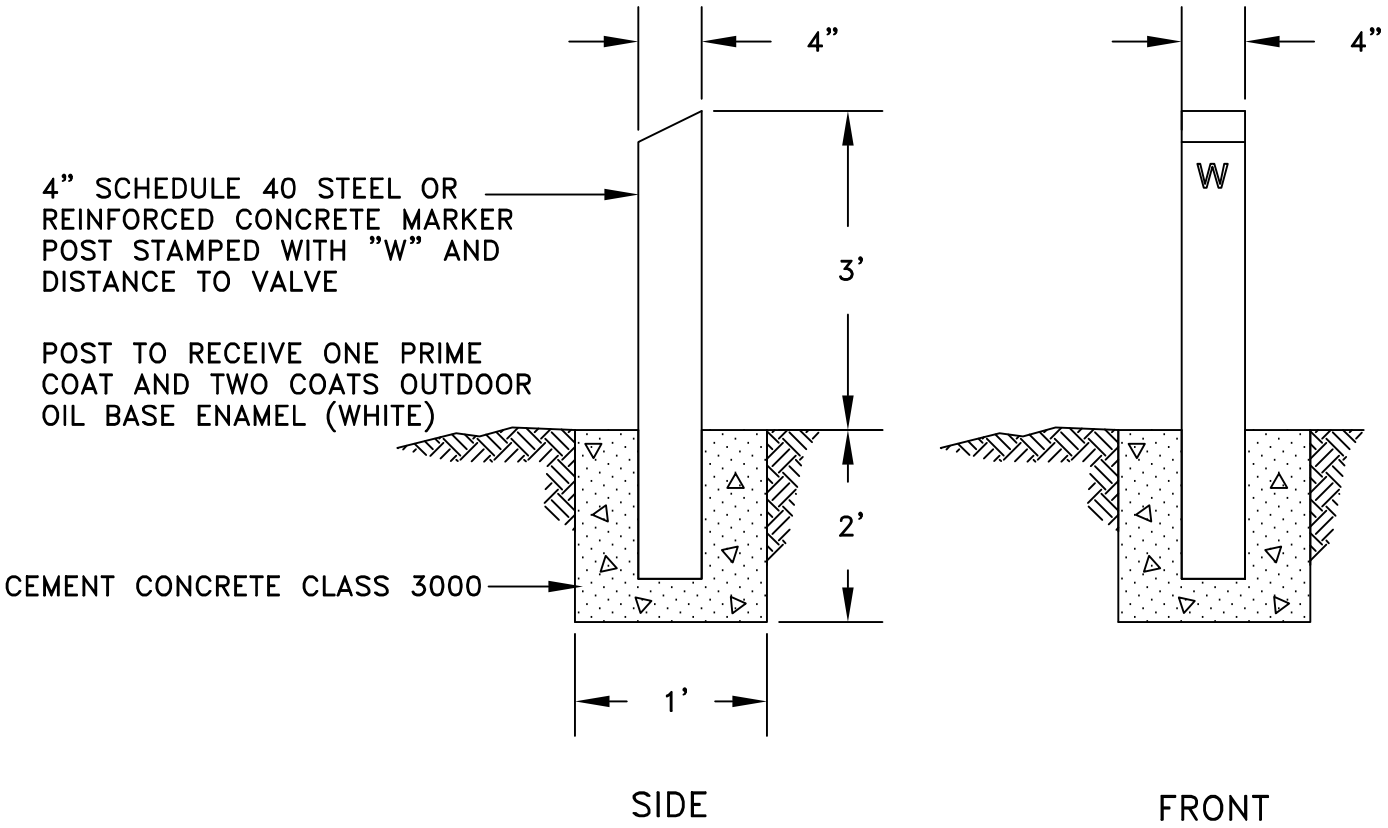

VALVE MARKER POST

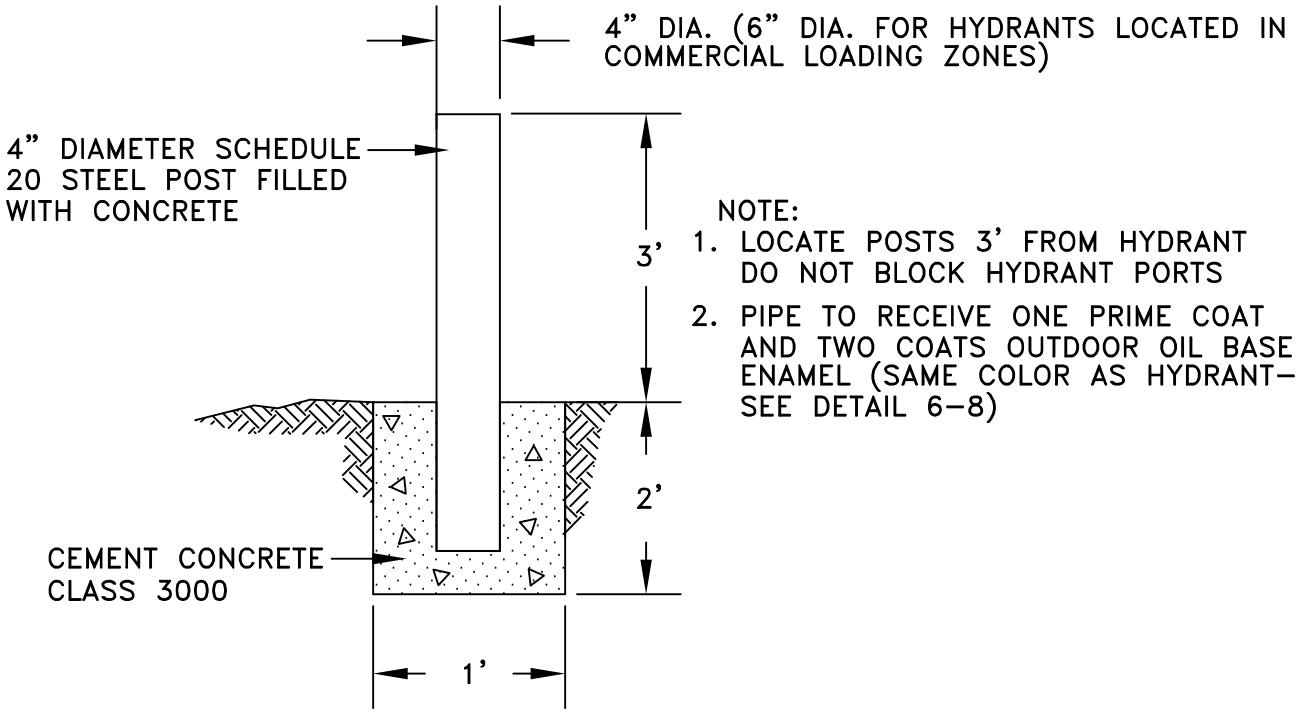

NOTE:

1. LOCATE POSTS 3' FROM HYDRANT DO NOT BLOCK HYDRANT PORTS
2. PIPE TO RECEIVE ONE PRIME COAT AND TWO COATS OUTDOOR OIL BASE ENAMEL (SAME COLOR AS HYDRANT–SEE DETAIL 6–8)

HYDRANT BOLLARD

City of Stanwood			WATER SYSTEM STANDARD DETAIL
			VALVE MARKER POST & HYDRANT BOLLARD DETAIL
File: STADETW11	Revised: OCT 14, 2003	Printed: OCT 14, 2003	DRAWING NO. W–11

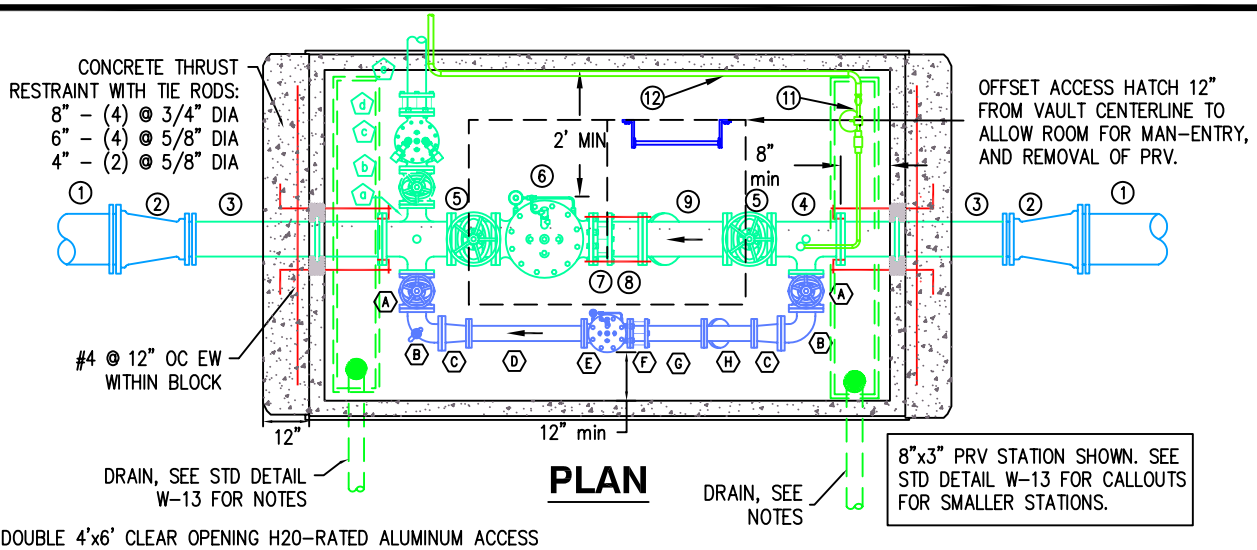

PLAN

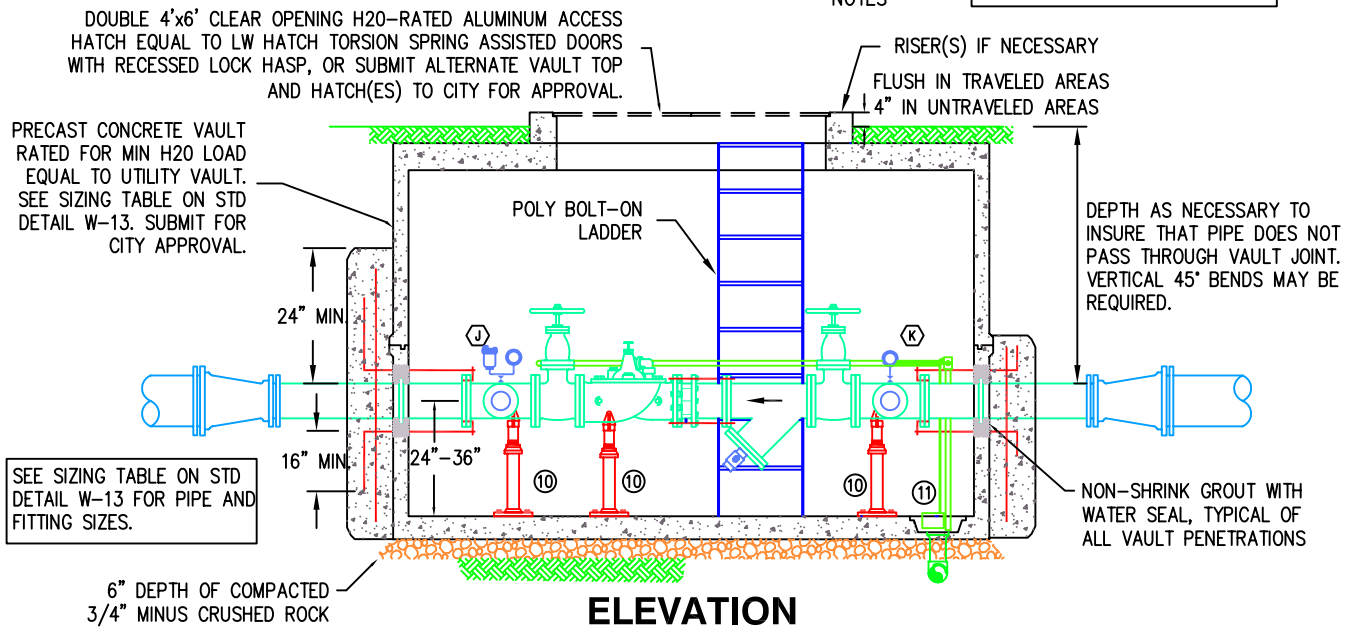

ELEVATION

1. DI PIPE, LENGTH TO FIT
2. DI REDUCER (MJxMJ)
3. DI SPOOL WITH COLLAR (FLxPE) LTF, OR LINK-SEAL
4. DI REDUCING TEE (FLxFLx4"FL) w/1" TAP ON TOP
5. RS GATE VALVE (FLxFL) w/HAND WHEEL
6. CLA-VAL 90G-01ABCS PRESSURE REDUCING VALVE (FLxFL) OR CITY APPROVED EQUAL*, EPOXY LINING, VALVE POSITION INDICATOR.
7. FCA w/SHACKLE RESTRAINT
8. DI PIPE (FLxPE) APPROX. 12" LENGTH
9. STRAINER (FLxFL) EQUAL TO WATTS 77F-D-FDA, EPOXY LINED AND BRASS BALL VALVE FOR BLOW OUT
10. ADJUSTABLE SADDLE PIPE SUPPORT, RISER PIPE, AND BASE EQUAL TO GRINNEL FIGURE 264. ALSO PROVIDE (1) UNDER BYPASS LINE
11. HYDROMATIC PUMP GC SYSTEMS MODEL #996633-51-2 W/FLOAT SWITCH (IF REQUIRED, SEE W-13)
12. 1" GALVANIZED PUMP DISCHARGE PIPE SECURED TO VAULT WALL

a. SAME AS 4 OR REDUCING CROSS (FL) FOR PRESSURE RELIEF VALVE.
b. RS GATE VALVE (FLxFL)
c. CLA-VAL 50G-01 PRESSURE RELIEF VALVE (FLxFL) OR CITY APPROVED EQUAL*, EPOXY LINING, VALVE POSITION INDICATOR, POLY PILOT LINES
d. FCA
e. DI PIPE

A. 4" RS GATE VALVE (FL)
B. 4" DI 90° BEND (FL)
C. 4"x3" DI REDUCER
D. 3" DI PIPE (FL) 36" LENGTH
E. CLA-VAL 90G-01ABS PRESSURE REDUCING VALVE (FLxFL) OR CITY APPROVED EQUAL*. EPOXY LINING, VALVE POSITION INDICATOR.
F. FCA
G. 4" DI PIPE (FLxPE) LTF
H. STRAINER (FL) EQUAL TO WATTS 77F-D-FDA AND BRONZE BALL VALVE FOR BLOW OUT
J. PRESSURE GAUGE AND AIR VALVE, SEE W-13
K. PRESSURE GAUGE, SEE W-13

NOTE: ITEMS a – e ARE USED ONLY IF A PRESSURE RELIEF VALVE IS TO BE INSTALLED. DETERMINATION OF WHEN TO INSTALL AND SIZING WILL BE BY THE CITY ON A PER PROJECT BASIS.

* CITY APPROVED EQUALS MUST BE SUBMITTED TO THE CITY FOR REVIEW. APPROVAL OR REJECTION SHALL BE DETERMINED BY THE CITY.

City of Stanwood		WATER SYSTEM STANDARD DETAIL	
		PRESSURE REDUCING STATION	
File: STADETW12	Revised: JUL 14, 2006	Printed: JUL 14, 2006	DRAWING NO. W-12

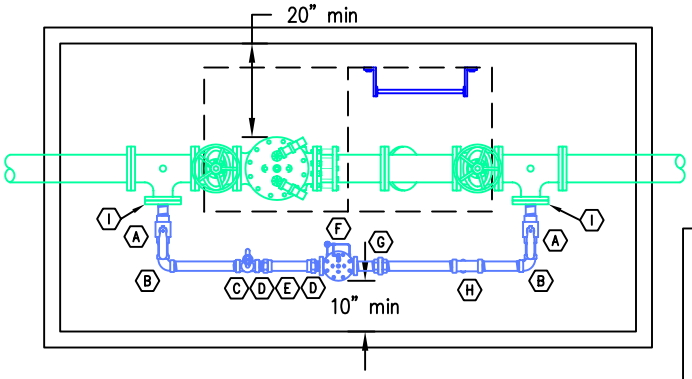

6"x2" PRV STATION

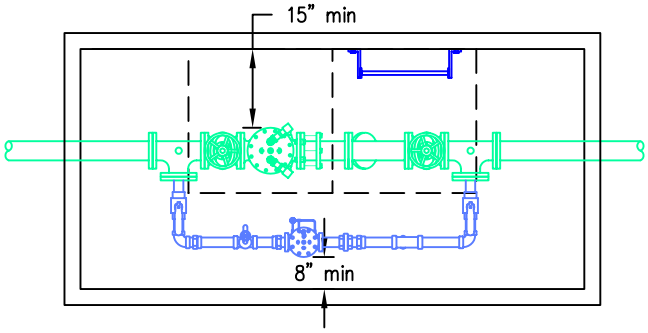

4"x2" PRV STATION

SIZING TABLE

Main Line	Main PRV	Bypass Line	Utility Vault
12"	8"	3"	712-LA
10"	8"	3"	712-LA
8"	6"	2"	612-LA
6"	4"	2"	5106-LA

1. SEE STD DETAIL 6-16 FOR ADDITIONAL STATION INFORMATION.

2. PREP ALL SURFACES PER PAINT MANUFACTURER'S INSTRUCTIONS PRIOR TO APPLICATION. REMOVE ALL DIRT, GREASE, SCALE AND RUST. FACTORY COATINGS SHALL BE ROUGHENED TO PROVIDE ADEQUATE PROFILE FOR TOP COATS.

3. COAT INTERIOR WALLS, DI PIPE, FITTINGS AND STEEL FASTENERS WITH POLYMIDE EPOXY PAINT, 2 COATS AT 5 DRY MILS EACH. COLORS: OFF WHITE FOR WALLS, LIGHT BLUE FOR PIPE. PIPE SHALL BE EMPTY DURING COATING.

4. COAT VAULT EXTERIOR WITH 20 MIL COAL TAR EPOXY.

5. PROVIDE VAULT DRAINAGE EITHER BY:
   a) 4" SCH 40 PVC DRAIN TO DAYLIGHT OR STORM SYSTEM, or
   b) GC SYSTEMS HYDROMATIC (WATER-POWERED) PUMP MODEL #996633-51-2

6. IF RESTORED SURFACE GRADE IS TO BE GREATER THAN 2%, VAULT ACCESS SHALL INCLUDE ADJUSTMENT RISERS TO MATCH GRADE.

7. ALL BALL VALVES AND CURB STOP SHALL BE FULL-PORT.

8. ALL FASTENERS SHALL BE STAINLESS STEEL.

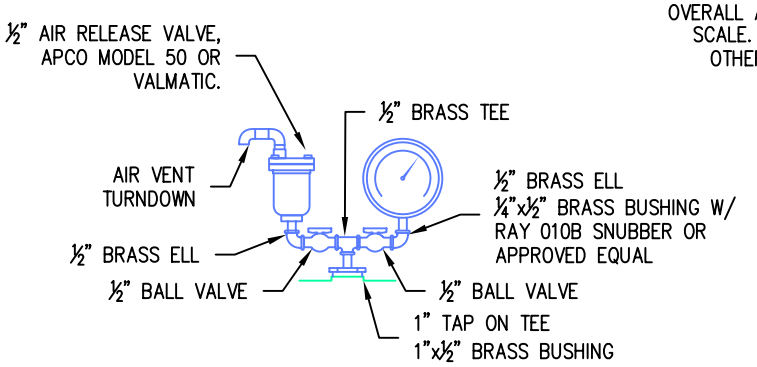

GAUGE & AIR VALVE

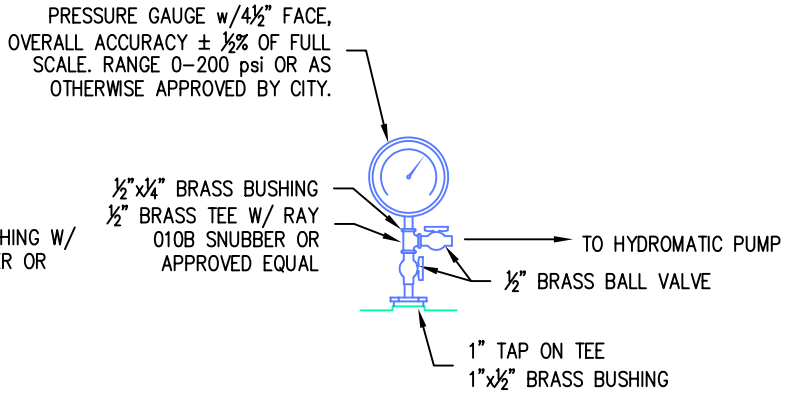

GAUGE

NOTE, BRASS NIPPLES NOT CALLED OUT, PROVIDE AS NECESSARY.

(A) 2" BRASS BALL VALVE (THREADED)

(B) 2" BRASS 90° BEND (THREADED)

(C) 2" BRASS TEE (THREADED)
¾" HOSE BIB

(D) 2" BRASS THREADxSWEAT ADAPTER

(E) 2" COPPER PIPE, LTF

(F) CLA-VAL 90G-01ABS PRESSURE REDUCING VALVE (THREADED) OR CITY APPROVED EQUAL*. EPOXY LINING, VALVE POSITION INDICATOR, POLY PILOT LINES.

(G) 2" BRASS UNION

(H) STRAINER (THREADED) EQUAL TO WATTS 777S AND BRONZE BALL VALVE FOR BLOW OUT

(I) 4" DI BLIND FLANGE w/2" TAP

USE THREADED BRASS NIPPLES (NOT CALLED OUT) ON BYPASS PIPING. USE CLOSE NIPPLES WHEREVER POSSIBLE.

* CITY APPROVED EQUALS MUST BE SUBMITTED TO THE CITY FOR REVIEW. APPROVAL OR REJECTION SHALL BE DETERMINED BY THE CITY.

City of Stanwood

WATER SYSTEM STANDARD DETAIL

PRESSURE REDUCING STATION DETAILS

File: STADETW13	Revised: JUNE 11, 2004	Printed: JUNE 11, 2004	DRAWING NO.	W-13

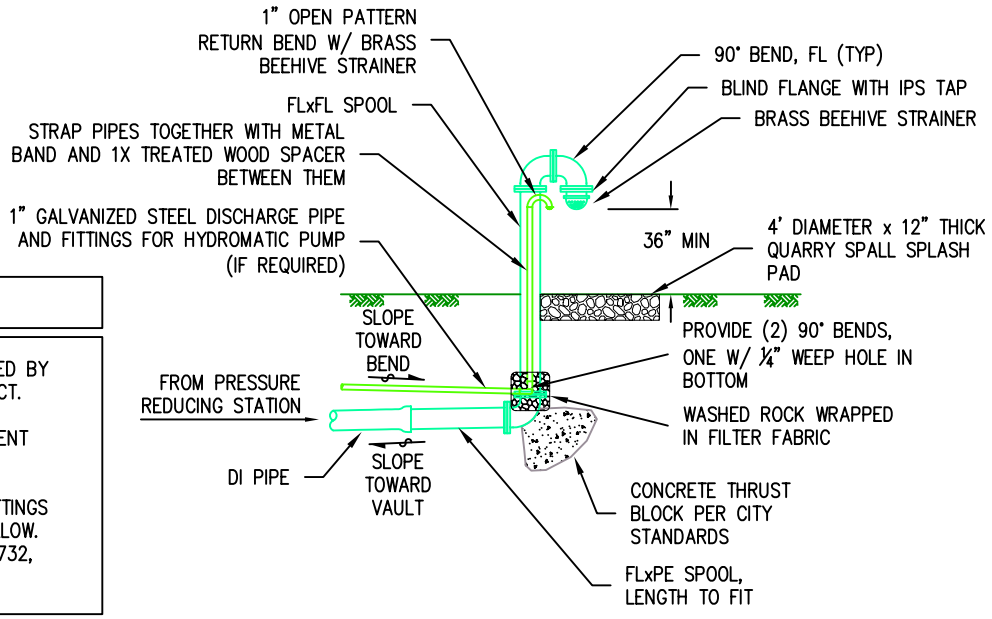

NOTES

1. PIPING SHALL BE SIZED AND LOCATED BY THE CITY FOR EACH INDIVIDUAL PROJECT.

2. DI PIPING SHALL BE CLASS 52 CEMENT LINED DUCTILE IRON.

3. PAINT ALL EXPOSED PIPING AND FITTINGS ABOVE GRADE RUSTOLEUM SAFETY YELLOW. BASE No. 288–14, COLOR CODE AX–6732, T–4432, OR PER CITY ENGINEER.

City of Stanwood

WATER SYSTEM STANDARD DETAIL

PRESSURE RELIEF DISCHARGE PIPING

File: STADETW13B	Revised: JUL 14, 2006	Printed: JUL 14, 2006	DRAWING NO.	W–13B

MATERIALS

SERVICE SADDLE	ROMAC 202S
CORPORATION STOP	FORDF1101
SAMPLING STATION	KUPFERLE ECLIPSE MODEL NO. 88

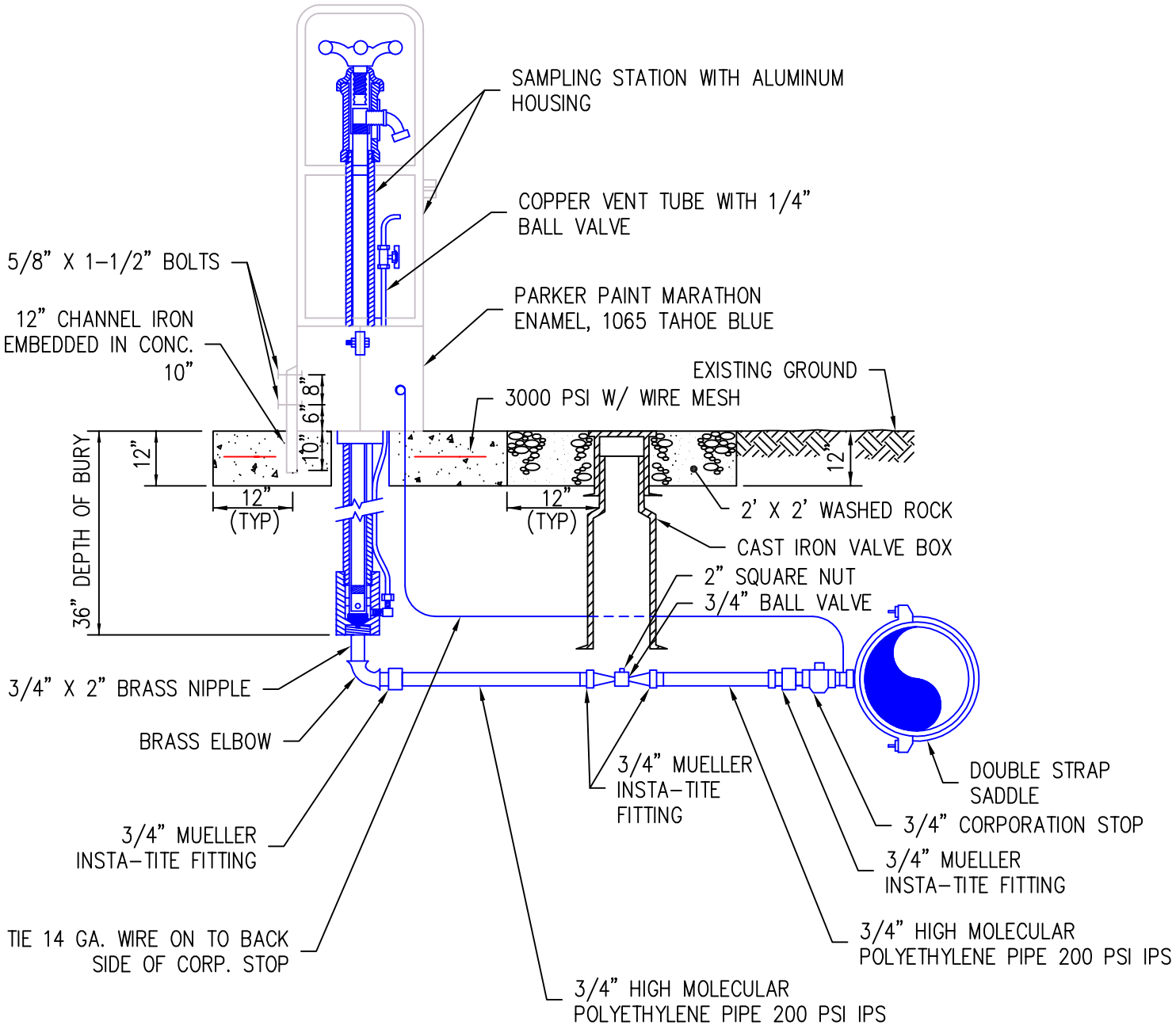

City of Stanwood

WATER SYSTEM STANDARD DETAIL

WATER SAMPLING STATION

File: STADETW14	Revised: OCT 14, 2003	Printed: OCT 14, 2003	DRAWING NO.	W-14

INSTALLATION

THE PRESSURE REDUCING VALVE SHALL BE LOCATED ON THE CUSTOMER'S PROPERTY "DOWNSTREAM" OF THE METER BOX. RESPONSIBILITY FOR PROPER INSTALLATION, OPERATION, AND MAINTENANCE OF THE VALVE SHALL BE ASSUMED BY THE CUSTOMER.

MATERIALS

3/4" PRESSURE REDUCING VALVE WILKINS REGULATOR MODEL #600 OR EQUAL

3/4" ADAPTER. ONE END FOR THREADED BRASS, OTHER END AS NECESSARY FOR SERVICE CONNECTION.

3/4" BRASS NIPPLE, APPROX. 4" LONG. IPT BOTH ENDS

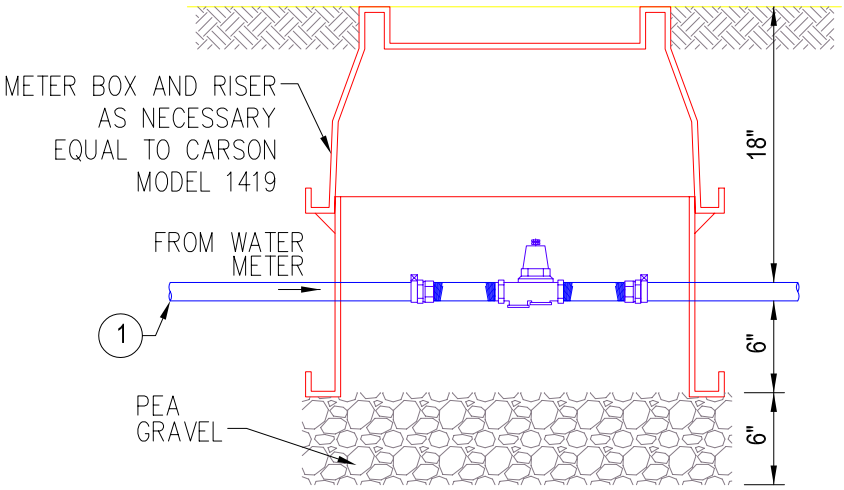

SERVICE PRESSURE REDUCER

1 CONNECTIONS FROM METER TO PRV SHALL BE BRASS OR COPPER, AWWA TYPE K

FUNCTION

THE FUNCTION OF A PRESSURE REDUCING VALVE IS TO REDUCE HIGH-WATER PRESSURES IN THE SERVICE CONNECTION TO AN ACCEPTABLE RANGE OF 25 TO 75 PSI. INSTALLATION OF A PRESSURE REDUCING VALVE IS REQUIRED WHERE THE SERVICE CONNECTION PRESSURE EXCEEDS 80 PSI IN ACCORDANCE TO THE UNIFORM PLUMBING CODE.

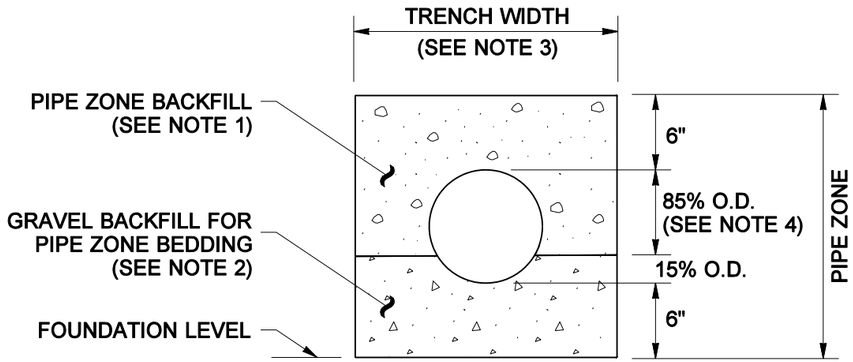

CONCRETE AND DUCTILE IRON PIPE

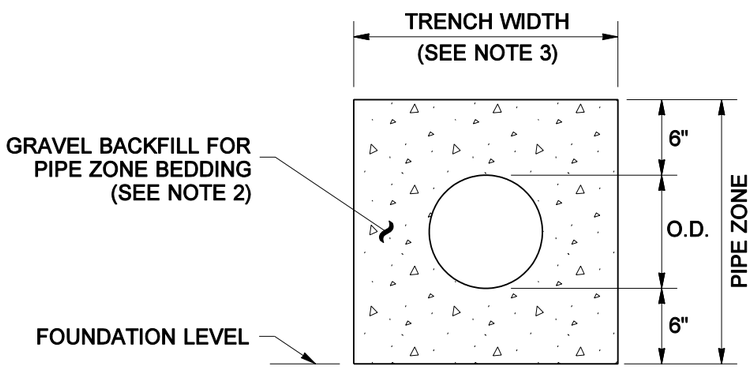

THERMOPLASTIC PIPE

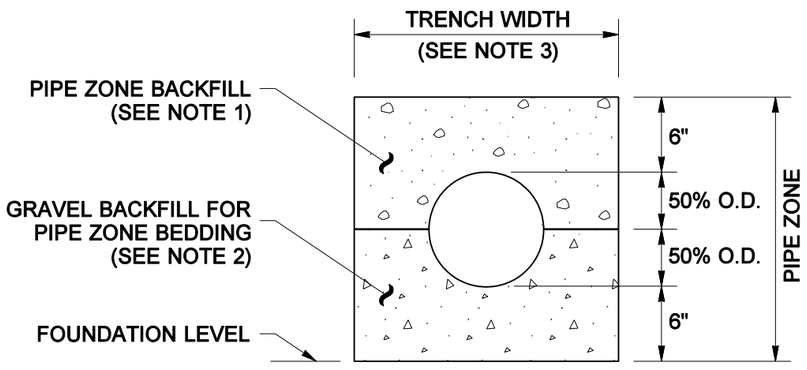

METAL PIPE

NOTES

1. See Standard Specifications Section 7-08.3(3) for Pipe Zone Backfill.
2. See Standard Specifications Section 9-03.12(3) for Gravel Backfill for Pipe Zone Bedding
3. See Standard Specifications Section 2-09.4 for Measurement of Trench Width.
4. For sanitary sewer installation, concrete pipe shall be bedded to spring line.

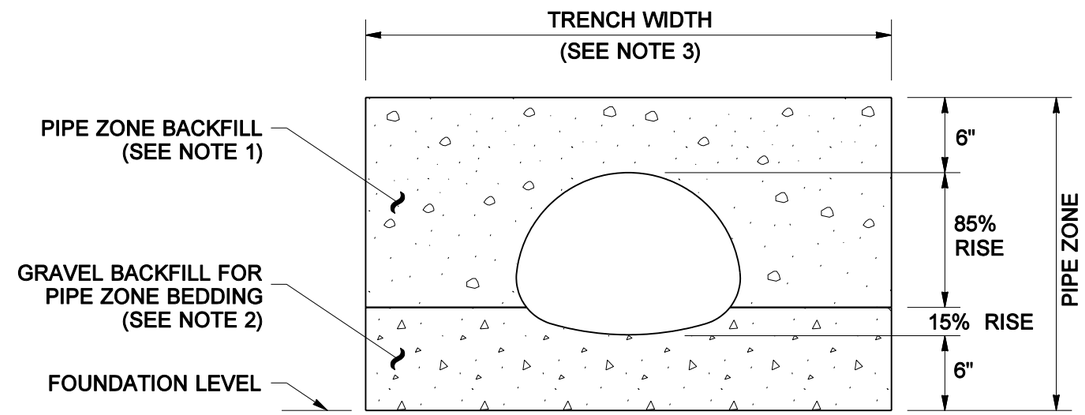

PIPE ARCHES

CLEARANCE BETWEEN PIPES FOR MULTIPLE INSTALLATIONS		
PIPE	SIZE	MINIMUM DISTANCE BETWEEN BARRELS
CIRCULAR PIPE (DIAMETER)	12" to 24" 30" to 96" 102" to 180"	12" DIAM. /2 48"
PIPE ARCH METAL ONLY (SPAN)	18" to 36" 43" to 142" 148" to 200"	12" SPAN /3 48"

PIPE ZONE BEDDING AND BACKFILL

STANDARD PLAN B-11

NOTE: THIS PLAN IS NOT A LEGAL ENGINEERING DOCUMENT BUT AN ELECTRONIC DUPLICATE. THE ORIGINAL, SIGNED BY THE ENGINEER AND APPROVED FOR PUBLICATION, IS KEPT ON FILE AT THE WASHINGTON STATE DEPARTMENT OF TRANSPORTATION. A COPY MAY BE OBTAINED UPON REQUEST.

DATE	REVISION	BY
7/01	DELETED "Bedding material for thermoplastic pipe"	MAS

APPROVED FOR PUBLICATION

Clifford E. Mansfield — STATE DESIGN ENGINEER

07-31-01 — DATE

Washington State Department of Transportation

NOTES

1. Size of combination air release/air vacuum valve shall be specified in the Contract. Piping and valves shall be the same size as the combination air release/air vacuum valve.

2. Locate at the high point of the main, tap top of main.

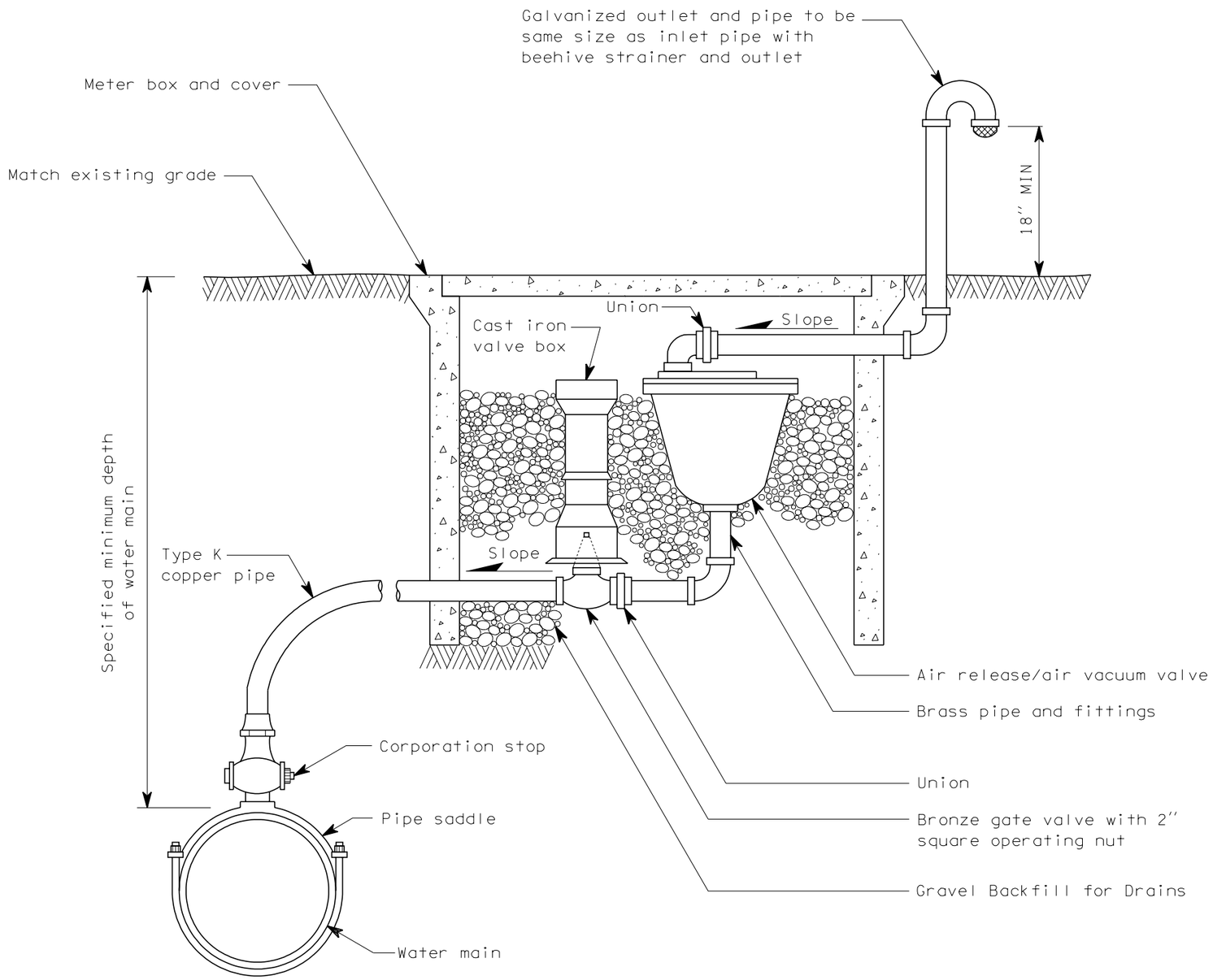

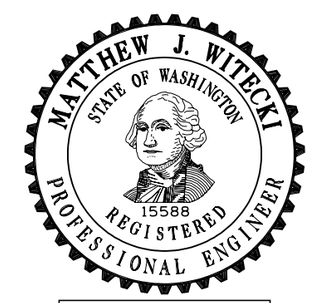

EXPIRES JULY 1, 1999

COMBINATION AIR RELEASE/ AIR VACUUM VALVE ASSEMBLY STANDARD PLAN B-21a

NOTE: THIS PLAN IS NOT A LEGAL ENGINEERING DOCUMENT BUT AN ELECTRONIC DUPLICATE. THE ORIGINAL, SIGNED BY THE ENGINEER AND APPROVED FOR PUBLICATION, IS KEPT ON FILE AT THE WASHINGTON STATE DEPARTMENT OF TRANSPORTATION. A COPY MAY BE OBTAINED UPON REQUEST.

DATE	REVISION	BY
8/98	DELETED NOTES 3 & 4	RAG

APPROVED FOR PUBLICATION

Clifford E. Mansfield — 8/10/98

DEPUTY STATE DESIGN ENGINEER — DATE

WASHINGTON STATE DEPARTMENT OF TRANSPORTATION
OLYMPIA, WASHINGTON

NOTES

1. Steel tie rods to be heavily coated wtih asphalt after installation.

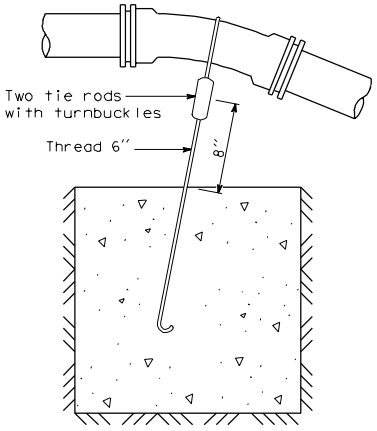

BLOCKING FOR 11.25° OR 22.5° VERTICAL BENDS

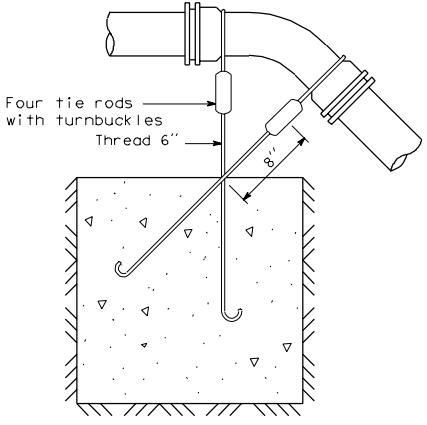

BLOCKING FOR 45° VERTICAL BENDS

DIMENSION TABLE						
PIPE DIA	TEST PRESSURE PSI	BEND ANGLE	CONCRETE VOLUME Ft^3	CUBE SIZE Ft	TIE ROD DIA	TIE ROD EMBEDMENT
4"	250	11.25°	6	1.8	5/8"	17"
		22.5°	12	2.3		
		45°	22	2.8		
6"	250	11.25°	14	2.4	5/8"	17"
		22.5°	27	3.0		
		45°	50	3.7		
8"	250	11.25°	25	2.9	5/8"	17"
		22.5°	48	3.6		
		45°	89	4.5		
10"	250	11.25°	38	3.4	5/8"	17"
		22.5°	75	4.2		
		45°	139	5.2		
12"	250	11.25°	55	3.8	5/8"	17"
		22.5°	108	4.8		
		45°	200	5.8	7/8"	24"
14"	250	11.25°	75	4.2	5/8"	17"
		22.5°	147	5.3	3/4"	20"
		45°	272	6.5	1"	27"
16"	250	11.25°	98	4.6	5/8"	17"
		22.5°	192	5.8	7/8"	24"
		45°	355	7.1	1 1/8"	30"

CONCRETE BLOCKING FOR CONVEX VERTICAL BENDS

B-22 1 of 1

05-09-97

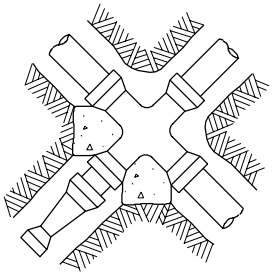

UNBALANCED CROSS
(Use column A)

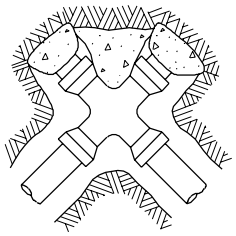

PLUGGED CROSS
(Use column B)

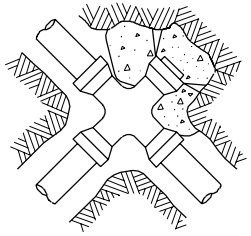

PLUGGED CROSS
(Use column A)

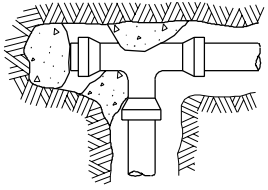

PLUGGED TEE
(Use column B)

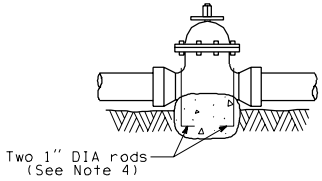

VALVE
(Use column A)

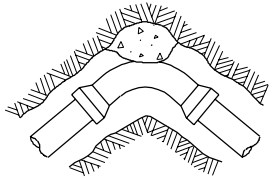

BEND

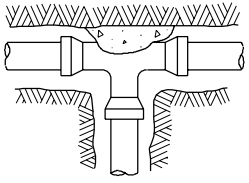

TEE

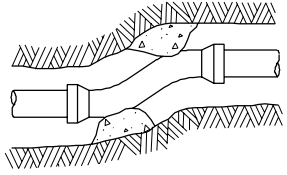

OFFSET
(Use columns B - E)

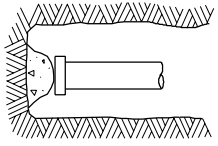

DEAD END

NOTES:

1. Contractor to provide blocking adequate to withstand full test pressure.
2. Divide thrust by safe bearing load to determine required area (in square feet) of concrete to distribute load.
3. Areas to be adjusted for other pressure conditions.
4. Provide two 1" minimum diameter rods on valves up through 10" diameter. Valves larger than 10" require special tie rod design.

Size	Test Pressure PSI	Thrust at Fittings in Pounds				
		A	B	C	D	E
		Tee and Dead Ends	90° Bend	45° Bend	22.5° Bend	11.25° Bend
4"	250	3,140	4,440	2,405	1,225	615
6"	250	7,070	9,995	5,410	2,760	1,385
8"	250	12,565	17,770	9,620	4,905	2,465
10"	250	19,635	27,770	15,030	7,660	3,850
12"	250	28,275	39,985	21,640	11,030	5,545
14"	250	38,485	54,425	29,455	15,015	7,545
16"	250	50,265	71,085	38,470	19,615	9,855

Soil Type	Safe Bearing Load PSF
Muck, peat, etc.	0
Soft clay	1,000
Sand	2,000
Sand and gravel	3,000
Sand and gravel cemented with clay	4,000
Hard shale	10,000

CONCRETE THRUST BLOCK

NOTES

1. Paint pipe threads with asphalt paint after assembly.
2. All piping to be galvanized steel.
3. Valve and piping to valve to be 2" unless otherwise noted on plan.
4. Locate blowoff outlet near property corner if possible.

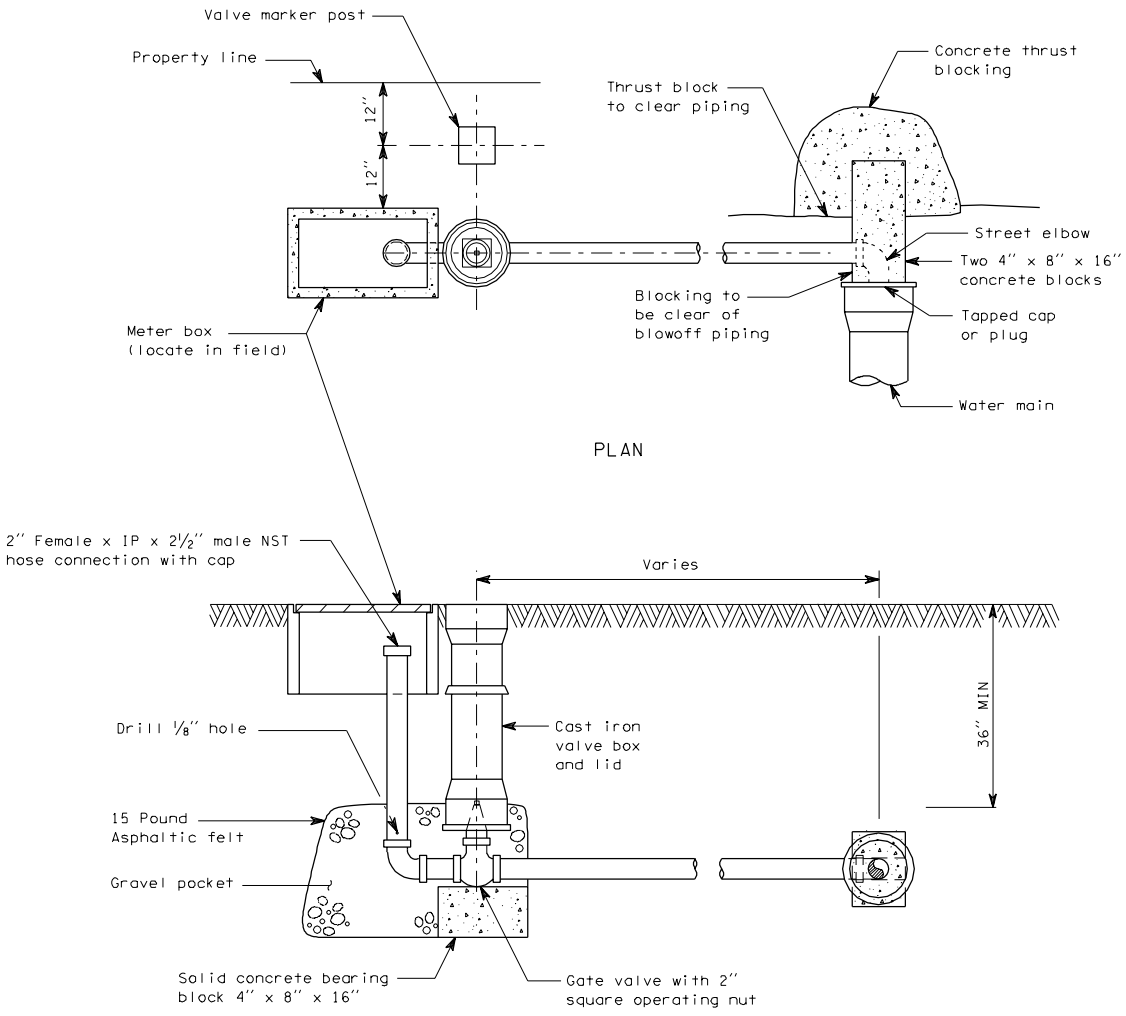

2 INCH BLOWOFF ASSEMBLY

APPENDIX I

WATER RIGHT INFORMATION

Washington State Department of Health
Division of Environmental Health
Office of Drinking Water

Table 1

WATER SYSTEM PLAN
WATER RIGHTS SELF ASSESSMENT – EXISTING 2007 STATUS

PERMIT CERTIFICATE OR CLAIM #	NAME ON DOCUMENT	PRIORITY DATE (List oldest first)	SOURCE NAME/ NUMBER	ANY PORTION SUPPLEMENTAL? (If yes, explain in footnote)	EXISTING WATER RIGHTS		EXISTING CONSUMPTION		CURRENT WATER RIGHT STATUS (Excess/Deficiency)	
					Maximum Instantaneous Flow Rate (Qi)	Maximum Annual Volume (Qa)	Maximum Instantaneous Flow Rate (Qi)	Maximum Annual Volume (Qa)	Maximum Instantaneous Flow Rate (Qi)	Maximum Annual Volume (Qa)
Permits/ Certificates 1. S1-02432CWRIS	Stanwood Water Company	9/28/1928	Hatt Slough Springs/ S01	No	2.5 cfs (1,122 gpm)	1,810 acre-ft	350 gpm	157 acre-ft	Excess – 772 gpm	Excess – 1,653 acre-ft
2. G1-00741CWRIS	Stanwood Water Company	2/20/1948	Bryant Well Nos. 1 & 2/S02, S03	No	2,000 gpm	2,400 acre-ft	1,350 gpm	911 acre-ft	Excess – 650 gpm	Excess – 1,489 acre-ft
3. G1-01067CWRIS	Stanwood Water Company	2/11/1949	Fure Well/ S04	No	150 gpm	121 acre-ft	0 gpm	0 acre-ft	Excess – 150 gpm	Excess – 121 acre-ft
4. CG1-04239	Stanwood Water Company	3/6/1956 (change 9/21/2001)	Cedarhome Well/ S07	No	600 gpm	960 acre-ft	0 gpm	0 acre-ft	Excess – 600 gpm	Excess – 960 acre-ft
5.										
Claims 1.										
TOTAL	**********	*********	*********	**********	3,872 gpm	5,291 acre-ft	2007 PDD - 1,663 gpm	2007 ADD - 1,068 acre-ft	Excess – 2,172 gpm	Excess – 4,223 acre-ft

INTERTIE NAME/ IDENTIFIER	NAME OF PURVEYOR PROVIDING WATER	EXISTING LIMITS ON INTERTIE USE		EXISTING CONSUMPTION THROUGH INTERTIE		CURRENT INTERTIE SUPPLY STATUS (Excess/Deficiency)	
		Maximum Instantaneous Flow Rate (Qi)	Maximum Annual Volume (Qa)	Maximum Instantaneous Flow Rate (Qi)	Maximum Annual Volume (Qa)	Maximum Instantaneous Flow Rate (Qi)	Maximum Annual Volume (Qa)
1.							
TOTAL	**********						

PENDING WATER RIGHT APPLICATION (New/Change)	NAME ON APPLICATION	DATE SUBMITTED	ANY PORTION SUPPLEMENTAL? (If yes, explain in footnote)	PENDING WATER RIGHTS	
				Maximum Instantaneous Flow Rate (Qi) Requested	Maximum Annual Volume (Qa) Requested
1.					

The Department of Health is an equal opportunity agency. For persons with disabilities, this document is available on request in other formats. To submit a request, please call 1-800-525-0127 (TTY 1-800-833-6388). For additional copies of this form, call 1-800-521-0323. This and other forms are available at http://www.doh.wa.gov/ehp/dw

To return form, please see reverse side.

Washington State Department of Health
Division of Environmental Health
Office of Drinking Water

Table 2

WATER SYSTEM PLAN
WATER RIGHTS SELF ASSESSMENT – 6 YEAR (2013) FORECAST

PERMIT CERTIFICATE OR CLAIM #	NAME ON DOCUMENT	PRIORITY DATE (List oldest first)	SOURCE NAME/ NUMBER	ANY PORTION SUPPLEMENTAL? (If yes, explain in footnote)	EXISTING WATER RIGHTS		FORECASTED WATER USE FROM SOURCES (6-year Demand)		FORECASTED WATER RIGHT STATUS (Excess/Deficiency)	
					Maximum Instantaneous Flow Rate (Qi)	Maximum Annual Volume (Qa)	Maximum Instantaneous Flow Rate (Qi)	Maximum Annual Volume (Qa)	Maximum Instantaneous Flow Rate (Qi)	Maximum Annual Volume (Qa)
Permits/ Certificates 1. S1-02432CWRIS	Stanwood Water Company	9/28/1928	Hatt Slough Springs/ S01	No	2.5 cfs (1,122 gpm)	1,810 acre-ft	350 gpm	160 acre-ft	Excess – 772 gpm	Excess – 1,650 acre-ft
2. G1-00741CWRIS	Stanwood Water Company	2/20/1948	Bryant Well Nos. 1 & 2/S02, S03	No	2,000 gpm	2,400 acre-ft	1,350 gpm	910 acre-ft	Excess – 650 gpm	Excess – 1,490 acre-ft
3. G1-01067CWRIS	Stanwood Water Company	2/11/1949	Fure Well/ S04	No	150 gpm	121 acre-ft	0 gpm	0 acre-ft	Excess – 150 gpm	Excess – 121 acre-ft
4. CG1-04239	Stanwood Water Company	3/6/1956 (change 9/21/2001)	Cedarhome Well/ S07	No	600 gpm	960 acre-ft	500 gpm	198 acre-ft	100 gpm	Excess – 762 acre-ft
5.										
TOTAL	**********	*********	*********	**********	3,872 gpm	5,291 acre-ft	2013 PDD - 1,974 gpm	2013 ADD - 1,268 acre-ft	Excess – 1,672 gpm	Excess – 4,023 acre-ft

INTERTIE NAME/ IDENTIFIER	NAME OF PURVEYOR PROVIDING WATER	EXISTING LIMITS ON INTERTIE USE		FORECASTED CONSUMPTION THROUGH INTERTIE		FORECASTED INTERTIE SUPPLY STATUS (Excess/Deficiency)	
		Maximum Instantaneous Flow Rate (Qi)	Maximum Annual Volume (Qa)	Maximum Instantaneous Flow Rate (Qi)	Maximum Annual Volume (Qa)	Maximum Instantaneous Flow Rate (Qi)	Maximum Annual Volume (Qa)
1.							
TOTAL	**********						

PENDING WATER RIGHT APPLICATION (New/Change)	NAME ON APPLICATION	DATE SUBMITTED	ANY PORTION SUPPLEMENTAL? (If yes, explain in footnote)	PENDING WATER RIGHTS	
				Maximum Instantaneous Flow Rate (Qi) Requested	Maximum Annual Volume (Qa) Requested
1.					

The Department of Health is an equal opportunity agency. For persons with disabilities, this document is available on request in other formats. To submit a request, please call 1-800-525-0127 (TTY 1-800-833-6388). For additional copies of this form, call 1-800-521-0323. This and other forms are available at http://www.doh.wa.gov/ehp/dw

To return form, please see reverse side.

Washington State Department of Health
Division of Environmental Health
Office of Drinking Water

Table 3

WATER SYSTEM PLAN
WATER RIGHTS SELF ASSESSMENT – 20 YEAR (2027) FORECAST

PERMIT CERTIFICATE OR CLAIM #	NAME ON DOCUMENT	PRIORITY DATE (List oldest first)	SOURCE NAME/ NUMBER	ANY PORTION SUPPLEMENTAL? (If yes, explain in footnote)	EXISTING WATER RIGHTS		FORECASTED WATER USE FROM SOURCES (20-year Demand)		FORECASTED WATER RIGHT STATUS (Excess/Deficiency)	
					Maximum Instantaneous Flow Rate (Qi)	Maximum Annual Volume (Qa)	Maximum Instantaneous Flow Rate (Qi)	Maximum Annual Volume (Qa)	Maximum Instantaneous Flow Rate (Qi)	Maximum Annual Volume (Qa)
Permits/ Certificates 1. S1-02432CWRIS	Stanwood Water Company	9/28/1928	Hatt Slough Springs/ S01	No	2.5 cfs (1,122 gpm)	1,810 acre-ft	350 gpm	160 acre-ft	Excess – 772 gpm	Excess – 1,650 acre-ft
2. G1-00741CWRIS	Stanwood Water Company	2/20/1948	Bryant Well Nos. 1 & 2/S02, S03	No	2,000 gpm	2,400 acre-ft	2,000 gpm	1,545 acre-ft	0 gpm	Excess – 855 acre-ft
3. G1-01067CWRIS	Stanwood Water Company	2/11/1949	Fure Well/ S04	No	150 gpm	121 acre-ft	0 gpm	0 acre-ft	Excess – 150 gpm	Excess – 121 acre-ft
4. CG1-04239	Stanwood Water Company	3/6/1956 (change 9/21/2001)	Cedarhome Well/ S07	No	600 gpm	960 acre-ft	500 gpm	400 acre-ft	100 gpm	Excess – 560 acre-ft
5.										
TOTAL	**********	*********	*********	**********	3,875 gpm	5,296 acre-ft	2027 PDD – 2,715 gpm	2027 ADD - 2,105 acre-ft	Excess – 1,022 gpm	Excess – 3,186 acre-ft

INTERTIE NAME/ IDENTIFIER	NAME OF PURVEYOR PROVIDING WATER	EXISTING LIMITS ON INTERTIE USE		FORECASTED CONSUMPTION THROUGH INTERTIE		FORECASTED INTERTIE SUPPLY STATUS (Excess/Deficiency)	
		Maximum Instantaneous Flow Rate (Qi)	Maximum Annual Volume (Qa)	Maximum Instantaneous Flow Rate (Qi)	Maximum Annual Volume (Qa)	Maximum Instantaneous Flow Rate (Qi)	Maximum Annual Volume (Qa)
1.							
TOTAL	**********						

PENDING WATER RIGHT APPLICATION (New/Change)	NAME ON APPLICATION	DATE SUBMITTED	ANY PORTION SUPPLEMENTAL? (If yes, explain in footnote)	PENDING WATER RIGHTS	
				Maximum Instantaneous Flow Rate (Qi) Requested	Maximum Annual Volume (Qa) Requested
1.					

The Department of Health is an equal opportunity agency. For persons with disabilities, this document is available on request in other formats. To submit a request, please call 1-800-525-0127 (TTY 1-800-833-6388). For additional copies of this form, call 1-800-521-0323. This and other forms are available at http://www.doh.wa.gov/ehp/dw

To return form, please see reverse side.

STATE OF WASHINGTON
DEPARTMENT OF ECOLOGY

REPORT OF EXAMINATION FOR CHANGE TO GROUND WATER PERMIT
TO APPROPRIATE PUBLIC WATERS OF THE STATE OF WASHINGTON

☐ Surface Water (Issued in accordance with the provisions of Chapter 117, Laws of Washington for 1917, and amendments thereto, and the rules and regulations of the Department of Ecology.)

☒ Ground Water (Issued in accordance with the provisions of Chapter 263, Laws of Washington for 1945, and amendments thereto, and the rules and regulations of the Department of Ecology.)

PRIORITY DATE	APPLICATION NUMBER	PERMIT NUMBER	CERTIFICATE NUMBER
March 6, 1956	4239	4111	

NAME
City of Stanwood

ADDRESS (STREET)	(CITY)	(STATE)	(ZIP CODE)
10220 - 270 Street N.W.	Stanwood	Washington	98292

PUBLIC WATERS TO BE APPROPRIATED

SOURCE
Well (Cedarhome Well)

TRIBUTARY OF (IF SURFACE WATERS)

MAXIMUM CUBIC FEET PER SECOND	MAXIMUM GALLONS PER MINUTE	MAXIMUM ACRE FEET PER YEAR
	500	807

QUANTITY, TYPE OF USE, PERIOD OF USE

Municipal Supply - Continuous

LOCATION OF DIVERSION/WITHDRAWAL

APPROXIMATE LOCATION OF DIVERSION–WITHDRAWAL

LOCATED WITHIN (SMALLEST LEGAL SUBDIVISION)	SECTION	TOWNSHIP N.	RANGE, (E. OR W.) W.M.	W.R.I.A.	COUNTY
SW¼ NE¼	20	32	4 E	5	SNOHOMISH

RECORDED PLATTED PROPERTY

LOT	BLOCK	OF (GIVE NAME OF PLAT OR ADDITION)

LEGAL DESCRIPTION OF PROPERTY ON WHICH WATER IS TO BE USED

Area served by the City of Stanwood, as described in the City of Stanwood Comprehensive Water System Plan July 2001.

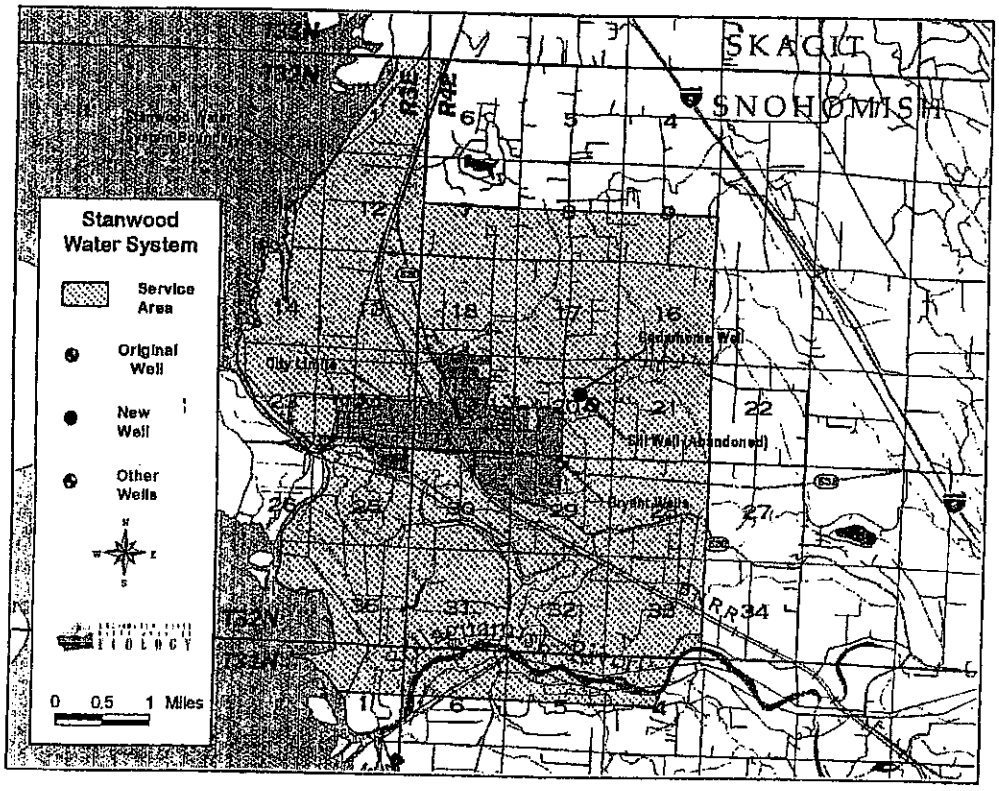

DESCRIPTION OF PROPOSED WORKS

The City of Stanwood's Group A public water system is supplied water by three wells and a spring source. Water storage is provided by four reservoirs (total capacity 1.6 million gallons). The water system has eight pressure zones, 6 pressure reducing stations, three booster pump stations and more than 54 miles of water main.

DEVELOPMENT SCHEDULE

BEGIN PROJECT BY THIS DATE:	COMPLETE PROJECT BY THIS DATE:	WATER PUT TO FULL USE BY THIS DATE:
Started	October 2, 2005	October 2, 2022

REPORT

The City of Stanwood is located in the Puget Sound lowland within Snohomish County. The City of Stanwood is a municipal corporation that owns and operates a Group A public water system within its corporate boundaries.

The City of Stanwood's water system serves customers within an elevation range of approximately sea level, near Skagit Bay and the Stillaguamish River, to approximately 240 feet above mean sea level near the Knittle Reservoirs. The wide range of elevations requires that the water pressure be increased or reduced to maintain pressures that are safe and sufficient to meet the flow requirements of the system. The Stanwood system is divided into four distinct pressure zones and four smaller reduced pressure areas.

BACKGROUND

On March 6, 1956, the Department of Conservation and Development (DCD) received an application for a permit to appropriate public ground waters from the Stanwood Water Company for domestic and industrial use in the amount of 1,000 gallons per minute. The well, described as the "Sill well," is located in the SE¼NE¼ of Section 20, Township 32N, Range 4E., W.M. The legal description of the place of use was identified as the towns of Stanwood and East Stanwood, in Snohomish County.

DCD issued a Report of Exam on July 17, 1956. The report recommended 1,000 gallons per minute and 1,600 acre-feet per year be issued for domestic and industrial use, less any amount diverted to this land under the following certificates: GWC 509-D, GWC 615-A, GWC 616-A, GWP 487, SWC 1164 and SWP 4416.

DCD issued Ground Water Permit 4111 on October 22, 1956, for 1,000 gallons per minute and 1,600 acre-feet per year, for continuous domestic supply and industrial use. The legal description for the place of use is consistent with the place of use described above.

A Proof of Appropriation of Water, from the Stanwood Water Company was notarized on November 19, 1956, for the quantities of 600 gallons per minute and 960 acre-feet per year.

DCD issued Ground Water Right Certificate 2986-A to the Stanwood Water Company on January 14, 1958. Ground Water Certificate 2986-A authorized 600 gallons per minute and 960 acre-feet per year for domestic supply and industrial use. The legal description for the place of use is consistent with that described above.

On February 1, 2002, Ecology issued Order No. 01WRNR-3410, rescinding Ground Water Certificate 2986-A to permit status (GWP 4111) due to finding that Ground Water Certificate 2986-A was issued in error.

Application For Change To Ground Water Permit 4111P

This change request to change the place of use, the point of withdrawal, and to properly identify the purpose of use for Ground Water Certificate 2986-A is applied as a change request to Ground Water Permit 4111. The change request included the instantaneous quantity of 600 gallons per minute and 960 acre-feet per year for municipal use.

Applicant:	City of Stanwood
Application No:	4239
Ground Water Permit No:	4111
Priority Date:	March 6, 1956
Date of Change Request:	October 2, 2001
Change Request:	Change the place of use, the point of withdrawal and to properly identify the purpose of use
Published:	March 29 and April 4, 2002
Protests:	None received during the statutory 30-day protest period

INVESTIGATION

In considering this application, my investigation included, but was not limited to research and/or review of:

1. The State Water Code,
2. Existing water rights for the Stanwood Water System,
3. Records of other water rights in the vicinity,
4. The change application as submitted,
5. Attachment A – Application Responses – a document submitted with the change application,
6. Report - Hydrogeologic Services: Installation and Testing of Production Well No. 4, August 17, 1995 (prepared by Geo Engineers),
7. Topographic and local area maps,
8. Correspondence from the City of Stanwood, and
9. City of Stanwood Coordinated Water System Plan, July 2001.

ate Water Code

Chapters 90.03 and 90.44 RCW authorize the appropriation of public water for beneficial use and describe the process for obtaining water rights including the process to amend or change existing rights. Laws specifically governing the water right permitting process are RCW 90.03.250 through 90.03.340 and RCW 90.44.060. Changes or amendments to these rights are covered under RCW 90.03.380 and RCW 90.44.100

City of Stanwood Water Rights

CERTIFICATE NUMBER	Priority Date	Date of Certification	Use	Instantaneous Quantity	Annual Quantity	Source
GW 509-D	May 18, 1917	April 19, 1948	Municipal Supply	250 gpm	17 afy	Well SW¼ NE¼ S.19,T32N,R4E,WM
Surface Water Certificate 1164	September 28, 1928	February 17, 1939	Municipal Water Supply	2.5 cfs	Not identified	Hat Slough S½NW¼ S.5,T31N,R4E,WM
Ground Water Certificate 615-A	February 20, 1948	May 14, 1951	Municipal Supply and Industrial Use	2,000 gpm	2,400 afy	Well – NW¼ NE¼ S. 9, T32N, R4E,WM
Ground Water Certificate 616-A	February 11, 1949	May 14, 1951	Municipal Supply and Industrial Use	150 gpm	121 afy	Well – NW¼ SE¼ S. 20, T32N, R4E, WM

Since the majority of the system's water rights are municipal, it follows that the domestic and municipal uses could not be physically separated in a way that would ensure that the water rights allocated in Ground Water Permit 4111 are used only for domestic and industrial purposes. The request to properly identify the type of beneficial use from "Domestic and Industrial" to "Municipal Supply" cannot be considered an enlargement to the existing water right.

The original request for this water right began in 1956. The report of exam written by Dee Molenaar, geologist with the Division of Water Resources, July 17, 1956, stated "The water requirements of the town are calculated at a continual pumping rate of 1,000 gpm, or 1600 acre-feet annually, consistent with beneficial domestic and industrial use, less any amount diverted to this land under the above listed existing rights." The current status of the referenced "above listed rights" are as follows:

Water Right Number	Instantaneous Quantity	Annual Quantity	Comments
GW Certificate 509D	250 gpm	17 afy	Active
SW Certificate 1164	2.5 cfs (1122 gpm)	Not Identified	Active - maximum possible afy is 1806.7
GW Certificate 615A	2000 gpm	2400 afy	Active
GW Certificate 616A	150 gpm	121 afy	Active
GW Permit 487	1400 gpm	1720 afy	Canceled
SW Permit 4416	.3 cfs (134.6 gpm)	216 afy	Canceled

The subject permit (GW Permit 4111) was issued for 1000 gallons per minute and 1600 acre feet per year. It is unclear what the permit writer meant by the above statement which included "less any amount diverted to this land under the above listed existing rights." If it is to be assumed that the original permit was supplemental to all the other rights, then it can also be assumed that since GW Permit 487 and SW Permit 4416 were canceled, then GW Permit 4111 would replace the canceled permits as a primary right.

To clarify and avoid confusion, the instantaneous and annual quantities eligible for change shall be based on the maximum quantity the Cedarhome well was tested at: 500 gallons per minute (807 acre-feet per year assuming continuous pumping).

Other Water Rights in the Vicinity

In searching Ecology data bases for water rights within Township 32, Range 4 E., W.M., the following certificates, and claims with appropriate priority dates, are listed in the table below:

Note: A determination of the validity has not been addressed for any certificate or claim listed below.

Id. Number	Type	Name	Priority Date	Source	Purpose	Section
G1-015968CL	Claim	Harter, Nina	1/01/1924	Well	DG, ST	16
G1-023058CL	Claim	Erickson, Ralph E.	1/01/1916	Well	DG, ST	16
G1-028196CL	Claim	Larson, Leon	1/01/1944	Well	DG	16
B1-200189CL	Claim	Sundquist, Gustav	1/01/1901	Well, Stream	DG, ST	16
G1-*07308C	Certificate 05550	Kromann, E.	8/26/1964	Well	DS, IR	17
G1-089546CL	Claim	Houx, Robert	1/01/1910	Well	DG	17
G1-104275CL	Claim	Hammontree, Don	1/01/1944	Well	DG, ST	17
G1-112211CL	Claim	Isakson, John	1/01/1896	Well	DG, ST,IR	17
G1-116679CL	Claim	Cedar Home Seventh	1/01/1924	Spring	DG	17
G1-145448CL	Claim	Florence, Earl	1/01/1934	Well	DG	17
G1-154028Cl	Claim	Nunes, Russell	1/01/1930	Well	DG, ST	17
G1-154029CL	Claim	Nunes, Russell	1/01/1925	Well	DG, ST	17
S1-*14385C	Certificate 07072	Pack 47 Cub Scouts	7/01/1957	Church Creek	FS	20
G1-016172CL	Claim	Anderson, Williams	1/01/1930	Well	DG	20
G1-026951CL	Claim	Kirn, George	1/01/1946	Well	DG	20
G1-027722CL	Claim	Kirn, George	1/01/1910	Well	DG, ST	20
G1-103982CL	Claim	Mac Kenzie, Donald	1/01/1930	Well	DG	20

G1-140096CL	Claim	Campbell, Henry	1/01/1912	Well	DG, IR	20
S1-*11035C	Certificate 07300	Blackford, C.	2/08/1952	Church Creek	DS, IR	21
G1-009550CL	Claim	Bostedt, J.	1/01/1914	Well	DG	21
G1-014525CL	Claim	Whitney, Elmer	1/01/1945	Well	DG, ST	21
G1-054199CL	Claim	Swanson, Raymond	1/01/1944	Well	DG	21
G1-088134CL	Claim	Hilmo, Walter	1/01/1916	Well	DG, ST	21
G1-091633CL	Claim	Klett, Clifford	1/01/1944	Well	DG	21
G1-134614CL	Claim	Keen, Harry	1/01/1942	Well	IR	21
G1-253816CL	Claim	Jensen, L	1/01/1930	Well	DG, ST	21

DG= General Domestic; DS= Single Domestic; ST= Stream; IR=Irrigation

Correspondence

April 8, 2002, the Washington State Department of Fish and Wildlife sent in their water right change application review without comments of concern regarding this application.

Topographic and Local Area Maps

Maps used included maps furnished by the applicant as well as the USGS 7.5 minute Stanwood Quadrangle.

City of Stanwood Water System Plan

The City of Stanwood submitted their Comprehensive Water System Plan, July 2001. The Comprehensive Water System Plan included the City's water service area boundary was defined in the 1992 North Snohomish County Coordinated Water System Plan; descriptions of the water system history, water sources, and analysis of the water system; and their water conservation plan. Information from this water system plan is reflected in the FINDINGS section of this report of exam.

FINDINGS

In accordance with state law, the following considerations must be addressed during the process of evaluating this change request:

Change in the Point of Withdrawal, the Place of Use and the Purpose of Use

- The change can not create an enlargement of the original right
- The change can not cause impairment to other existing rights
- The change can not impair the public interest
- Any protestant concerns must be addressed
- Water must be available at the new point of withdrawal
- The new point of withdrawal must tap the same source as the original point of withdrawal
- The new purpose of use must be considered a beneficial use of water

Enlargement of the Original Right

A change in the point of withdrawal, the place of use, and the purpose of use to Groundwater Permit 4111 will not enlarge the intent of the original water right application. The original (March 6, 1956) request for 1000 gallons of water per minute for domestic and industrial use was to serve the town of Stanwood and East Stanwood from a well located in the SE¼ NE¼ of Section 20, or otherwise known as the Sill Well.

No Impairment to Existing Rights

State law 90.44.100 (2d) states a ground water change can be made to a certificate or permit if "the construction and use of the new well shall not interfere with or impair water rights with an earlier date of priority than the water right or rights for the original well or wells."

No potential for impairment could be identified from the available data. The "Attachment – A, Application Responses," which was included in the application for change, states on page 2, bullet 3, "This report also indicates that the well is not in direct hydraulic continuity with nearby surface water nor are there any wells within 500 feet of Cedarhome Well that could be influenced by the new well."

Public Interest

No detriment to the public interest could be identified during the investigation of this application for change.

The Sill Well developed high levels of hydrogen sulfide as well as unidentified problems.[1] The 235 foot deep Sill Well no longer supplies water to the system. The Sill Well's location is within the drainage path of Church Creek, this fact resulted in an unprotected source of supply.[2] It is in the public interest to secure another source of water for the City of Stanwood.

Protests or Letters of Concern

Department of Fish and Wildlife letter of April 8, 2002, did not indicate any concerns. No protests were received.

[1] City of Stanwood, Comprehensive Water System Plan, July 2001, page 2-7.
[2] "Attachment A – Application Responses", included with the application for the change.

...er Availability

The Cedarhome Well

The Cedarhome Well (PW-4) was drilled in 1995 to replace the Sill Well. The 495 foot Cedarhome Well is located approximately 750 feet northwest of the original well. It has been tested for 500 gallons per minute. The instantaneous quantity of 500 gallons per minute (gpm) is based upon a hydrogeologic report by GeoEngineers. (Report - Hydrogeologic Services: Installation and Testing of Production Well No. 4, August 17, 1995.) The report recommends further testing beyond pumping greater than 500 gallons per minute. The maximum acre-feet per year pumping at 500 gallons per minute equates to 807 acre-feet per year.

The Cedarhome well is located at an approximate elevation of 137 feet above mean sea level (MSL). It is located in the SW¼ NE¼ of Section 20, Township 32, Range 4 East W.M. in Snohomish County. The Cedarhome well was drilled and installed between March and May 1995 using cable tool drilling equipment (Holt Testing of Puyallup, Washington). The boring was completed at a total depth of 490 feet. Sixteen-inch diameter steel casing was installed to a depth of 330 feet. Twelve-inch diameter steel casing was installed to a depth of 380 feet. Eight-inch diameter, stainless steel well screen assemblage was installed between depths of 365 feet and 480 feet[3].

Hydrogeologic Review

The Cedarhome well (PW-4) appears to be completed entirely in non-glacial deposits (Qpf), in a semi-confined aquifer at a depth between approximately 240 feet and 480 feet. The aquifer is separated from surface water and shallow ground water by approximately 45 feet of low-permeability Vashon till and from the Vashon advance aquifer by an additional 120 feet of low permeability glacial deposits.

According to the GeoEngineers report, it appears that the Qpf aquifer is primarily recharged by downward percolation from an overlying advance outwash aquifer.

The static water level in PW-4 was measured at 130 feet below the top of the casing. This indicates a water level elevation of approximately 7 feet above mean sea level.

In June 1995, PW-4 was pumped at 500 gpm for 24 hours. At the end of the 24 hours, the depth to water in the well measured 259 feet below the top of the casing indicating a total drawdown in the well due to the pumping of 129 feet. The pumping water level did not stabilize during the 24-hour test and was still dropping slowly at the conclusion of pumping. After conclusion of pumping, the recovery of water in the well was measured for 180 minutes. After 180 minutes the measured water level was 3.61 feet below the original static water level in the well (97% recovery.)

GeoEngineers calculated the transmissivity of the aquifer to be approximately 790 ft^2/d.

The measured specific capacity of the well is 3.9 gpm/ft of drawdown (500 gpm/129 feet of drawdown).

No storage coefficient could be calculated from the pumping test because there was no nearby well completed in the same aquifer that could be identified or monitored. Well PW-2 was monitored during the test, but it is less than ideal as a monitoring well because it is 1,700 feet away from well PW-4, completed considerable higher in the geologic section (probably the same body of public water but unknown if same aquifer), and the static water level elevation is an unrealistic 25 feet below sea level. No water level change was observed in PW-2 during the pumping test.

The aquifer tapped by PW-4 is defined as semi-confined in the GeoEngineers report, but this is not supported by the PW-4 well log. The aquifer is more likely leaky-confined with leakage occurring from the upper aquifers to the aquifer that PW-4 is completed within.

Chloride Test

Since PW-4 is within 3.5 miles of salt water and is completed more than 228 feet below sea level and will be withdrawing a large quantity of water, seawater intrusion is a potential concern. A water sample was collected on June 7, 1995, prior to the conclusion of the 24-hour pumping test that had a chloride concentration of 5 mg/L and an electrical conductivity of 243 umhos/cm. These values are low, but should be monitored to make sure that they don't rise, which would indicate salt water intrusion.

Well Safe Yield[4]

According to the GeoEngineers report, "The aquifer testing data indicate that PW-4 is easily capable of producing approximately 500 gallons per minute (1.90 m^3/min). At a pumping rate of 500 gpm, approximately 129 feet of water level drawdown was observed in the PW-4 and the pumping water level was at a depth of approximately 259 feet below ground surface. The top of the well screen assemblage is at a depth of approximately 365 feet. Assuming that the well pump is installed at the top of the well screen assemblage, approximately 106 feet of water column would be left above the top of the screen at a pumping rate of 500 gpm.

Same Source

Based on the GeoEngineers report that shows that the Sill and Cedarhome wells are approximately 750 feet apart, their static water level elevations are very similar, and they are both likely completed within the same geologic deposit (pre-Fraser nonglacial deposits, Qpfg), although not necessarily the same discrete layer, it can therefore be assumed that the wells tap the same source of public ground water.

Beneficial Use

Typical uses of municipal supply systems include such uses as domestic, stock watering, industrial, commercial, agricultural, irrigation, and environmental and esthetic uses.

According to Chapter 90.54 RCW, beneficial uses include: domestic, stock watering, industrial, commercial, agricultural, irrigation, hydroelectric power production, mining, fish and wildlife maintenance and enhancement, recreational, and thermal power production purposes, and preservation of environmental and esthetic uses, and all other uses compatible with the enjoyment of the public waters of the state, are declared to be beneficial.

---

[3] GeoEngineers, Report – Hydrogeologic Services Installation and Testing of Production Well No. 4, August 17, 1995.
[4] Report – Hydrogeologic Services Installation and Testing of Production Well No. 4, August 17, 1995, GeoEngineers, page 10.

RECOMMENDATIONS

I recommend the request for changes to Ground Water Permit 4111 be approved and a superseding permit issued, subject to the provisions listed below:

- The amount of water granted, 500 gallons per minute[5] and 807 acre-feet per year, is a maximum limit that shall not be exceeded and the water user shall be entitled only to that amount of water within the specified limit that is beneficially used and required.

- An approved measuring device shall be installed and maintained for each diversion/withdrawal of the sources identified by this water right in accordance with the rule "Requirements for Measuring and Reporting Water Use", Chapter 173-173 WAC.

  Water use data shall be recorded weekly. The maximum monthly rate of diversion/withdrawal and the monthly total volume shall be submitted to Ecology by January 31st of the following year. Ecology is requiring submittal of monthly meter readings to collect seasonal information for water resource planning, management and compliance.

  The following information shall be included with each submittal of water use data: owner, contact name if different, mailing address, daytime phone number, Permit/Certificate/Claim No., source name, volume including units, Department of Health WFI water system number and source number(s) (for public drinking water systems), and well tag number (for ground water withdrawals). In the future, Ecology may require additional parameters to be reported or more frequent reporting. Ecology prefers web based data entry, but does accept hard copies. Ecology will provide forms and electronic data entry information.

  Chapter 173-173 WAC describes the requirements for data accuracy, device installation and operation, and information reporting. It also allows a water user to petition Ecology for modifications to some of the requirements. Installation, operation and maintenance requirements are enclosed as a document entitled "Water Measurement Device Installation and Operation Requirements".

  Department of Ecology personnel, upon presentation of proper credentials, shall have access at reasonable times, to the records of water use that are kept to meet the above conditions, and to inspect at reasonable times any measuring device used to meet the above conditions.

- In order to monitor the resource, the static water level (SWL) shall be measured monthly. Measurements shall be taken after the pump has been shut off a reasonable time to allow the water level to return to normal. Ecology's Water Resources Section (Northwest Regional Office) shall be notified if a below normal seasonal drop is measured in SWL; otherwise this data shall be maintained and be made available to Ecology upon request.

  Since the pumping water level did not stabilize, the static ground water level should be monitored to make sure that pumping from the well is not mining the ground water from the aquifer.

- Chloride and conductivity measurements as well as depth to static water level (pump off), measured from the top of the well casing, shall be made on each production well in April and again in August of each year. The chloride conductivity and static water level measurement analysis shall be performed by a state-accredited laboratory. A copy of the laboratory results for all sampling events shall be submitted by October 15 of each year, to the Department of Ecology, Northwest Regional Office, Bellevue, Washington. For record keeping, please include the water right number on all copies.

  If pumping from the wells authorized by this water right causes chloride concentrations to show an increasing trend in any of the wells, immediate action shall be required to prevent pumping concentrations from increasing as is consistent with the water quality anti-degradation policy WAC 173-200-030. These actions include, but are not limited to reducing the instantaneous withdrawal rate (gpm) of the wells, lowering the annual quantity removed from the wells, rotating pumping cycles, or turning off certain wells. If chloride concentrations continue to increase, even after corrective measures are taken, the water right holder shall relinquish the option to perfect additional allocated quantities regardless of the stage of development.

- Installation and maintenance of an access port as described in Ground Water Bulletin No. 1 is required. An air-line and gauge may be installed in addition to the access port.

- If it can be shown that this change in the point of withdrawal and the place of use has a detrimental effect on existing rights, it shall be the responsibility of the operator to mitigate for this impact and/or alter or cease withdrawal of water.

- This permit is subject to the implementations of the minimum requirements established in the Interim Guidelines for Public Water Systems Regarding Water Use Reporting, Demand Forecasting Methodology and Conservation Programs, March 1994, which are enclosed.

- The applicant is advised that the superseding certificate will issue for only that quantity of water that has been withdrawn and applied to actual beneficial use. Such quantity applied to actual beneficial use shall not exceed the quantity specified in this report of exam and will be calculated based on the best information available to Ecology, including metering data and/or water duty analysis.

- A superseding certificate of water right will not be issued until a final investigation is made.

CONCLUSIONS

In accordance with chapters 90.03 and 90.44 RCW, I conclude that Ground Water Permit 4111 is in good standing and is eligible for change. I have determined that water is available. The change to the point of withdrawal, to the place of use, and to properly identify the purpose of use as municipal will not enlarge the original intent of the permit. Municipal use is a beneficial use of water. Approval of this change request should not cause impairment of existing rights or be detrimental to the public interest. Based on these conclusions, this change request should be approved subject to existing rights and the above-indicated provisions and a superseding permit should be issued.

REPORT BY: Peggy Williams DATE: 9-30-02

[5] As recommended in GeoEngineers report "Report - Hydrogeologic Services Installation and Testing of Production Well No. 4" August 17, 1995.

DOE active file

STATE OF WASHINGTON

DEPARTMENT OF ECOLOGY

Northwest Regional Office, 3190 - 160th Ave S.E. • Bellevue, Washington 98008-5452 • (206) 649-7000

August 3, 1993

City of Stanwood
10220 270th Street N.W.
Stanwood, WA 98292

Dear Sirs:

Re: PRELIMINARY PERMIT to Drill and Test a Well Under Ground Water Application G1-26964

The above application requested the withdrawal of public ground water at the rate of 1000 gallons per minute (gpm) for Municipal supply. The well site is located within the SW¼ NE¼, Section 20, T. 32 N., R. 4 E., W.M., of Snohomish County.

As the following PRELIMINARY PERMIT is consistent with State Water Code, specifically RCW 90.03.250 through 90.03.290, and 90.44.060, you are hereby granted a PRELIMINARY PERMIT to proceed with drilling and testing of the well. This letter serves as a PRELIMINARY PERMIT subject to existing rights and the following conditions:

1. This PRELIMINARY PERMIT will remain in effect until August 4, 1994, unless sooner revoked by the Department of Ecology.

2. All water wells constructed within the state shall meet the minimum standards for construction and maintenance as provided under chapter 18.104 RCW (Washington Water Well Construction Act of 1971) and chapter 173-160 WAC (Minimum Standards for Construction and Maintenance of Water Wells).

3. In accordance with WAC 173-160-205 wells shall not be located within certain minimum distances of potential sources of contamination. In general wells shall be located at least 100 feet from a sewer, septic tank, privy, or other source of contamination. Wells shall not be located within 1,000 feet of a solid waste landfill. Minimum distances shall also comply with state and local health regulations.

4. An access port, as described in the Department of Ecology's Groundwater Bulletin No. 1 (ECY 040-1-3, Rev. 12/90 [copy enclosed]), shall be installed and maintained. In order to facilitate accurate recovery data collection, the system shall incorporate backflow check-valve(s) that will prevent water from flowing back into the well when the pump is shut off.

5. The well shall be tested at a constant rate no less than the maximum design rate at which the well source will be used. WRIS Information Bulletin No. 30 (copy enclosed) shall be used as a guideline for designing and conducting the aquifer test. For water table aquifers, pumped water produced during the test shall be routed away from all wells and discharged such that this water will not recharge the drawdown cone during the test.

   Pumping during the test shall be conducted for a **minimum** of 24 hours, with stabilization of the pumping well water level occurring for at least the last 4 of those hours. Stabilization is defined as a drop in water level of less than or equal to 0.1 feet drawdown per hour during pumping.
   Water level measurements from one or more observation wells shall be taken during pumping and recovery. In order to provide meaningful data, all observation wells shall be completed in the same aquifer and located within a reasonable distance. At the completion of pumping, recovery data shall be collected from all wells until the pumped well nears pre-pumping static conditions and the water level recovery rate is less than 0.1 foot per hour.

7. When aquifer testing is completed, the data shall be compiled into a completion report. This completion report shall be submitted to the Department of Ecology, Northwest Regional Office and shall include the following:

   a. Well construction details for the pumping well, which shall include the well's total depth, screened interval depths, and pump intake depth.

b. Distance, to the nearest foot, from the pumping well to all observation wells and a map indicating all well locations.

c. Land surface elevations for all measuring points and method used for determining.

d. A legible table including the pumping rate and all water measurement data collected during pumping and recovery.

8. In addition to the above, a complete water well report for the well shall be submitted by the driller to the Department of Ecology within thirty (30) days of completion.

9. All expenses, risks, and liabilities incurred during well testing shall be borne by the applicant. If senior water right holders are adversely affected during any portion of the aquifer test, the test shall be terminated immediately.

10. This PRELIMINARY PERMIT grants the right to use this well for testing purposes only. No further use will be allowed from the well until such time as specific approval has been granted. Approval will not be considered until such time as the above conditions have been met.

11. The granting of this PRELIMINARY PERMIT shall not be construed, by inference or otherwise, that subject application will ultimately be approved. If the applicant fails to comply with the terms of this PRELIMINARY PERMIT, it may be canceled.

Any person wishing to appeal this action may obtain review by submitting a written request, within thirty (30) days of receipt of this order, to the Washington Pollution Control Hearings Board, 4224 - 6th Avenue S.E., Building 2, P.O. Box 40903, Lacey, Washington 98504-0903. Concurrently send to the Director of the Department of Ecology, P.O. Box 47600, Olympia, Washington 98504-7600, a copy of the request for review. These procedures are consistent with the provisions of chapter 43.21B RCW and the rules and regulations adopted thereunder.

Should you have any questions regarding this PRELIMINARY PERMIT please contact Janet Jorg at 649-7035.

Sincerely,

Stephen J. Hirschey
Section Supervisor
Water Resources

SH:jj:cw
Enclosures: WRIS Information Bulletin 30
Groundwater Bulletin No. 1

Hat Slough Springs

CERTIFICATE RECORD No. 3, PAGE No. 1164

STATE OF WASHINGTON, COUNTY OF Snohomish

CERTIFICATE OF WATER RIGHT

(For rights perfected under original, enlargement or secondary permits.)

(In accordance with the provisions of Chapter 117, Laws of Washington for 1917, and the regulations of the State Supervisor of Hydraulics thereunder.)

This is to certify, that Stanwood Water Company *of* Stanwood, *State of* Washington, *has made proof to the satisfaction of the State Supervisor of Hydraulics of Washington, of a right to the use of the waters of* Unnamed springs, *a tributary of* Hat Slough, *for the purposes of* Municipal water supply for the towns of Stanwood and East Stanwood, and vicinity, *under* Appropriation *Permit No.* 1234 *issued by the State Supervisor of Hydraulics, and that said right to the use of said waters has been perfected in accordance with the laws of Washington, and is hereby confirmed by the State Supervisor of Hydraulics of Washington and entered of record in Volume* 3, *at Page* 1164, *on the* 17th *day of* February, 19 39; *that the right hereby confirmed dates from* September 28, 1928; *that the amount of water to which such right is entitled and hereby confirmed, for the purposes aforesaid, is limited to an amount actually beneficially used for said purposes, and shall not exceed* 2.5 cubic feet per second. 1125 gpm 1125 G.P.M.

A description of the lands under such right to which the water hereby confirmed is appurtenant, and the place where such water is put to beneficial use, is as follows:

PLACE OF USE			LEGAL SUBDIVISION	FOR IRRIGATION	
Section	Township	Range		No. Acres Described in Permit	No. Acres Actually Irrigated

LOCATION OF POWER PLANT			LEGAL SUBDIVISION	FOR POWER	
Section	Township	Range		H. P. Described in Permit	H. P. Actually Developed

Section	Township	Range	LEGAL SUBDIVISION	FOR OTHER USES
	32 N.	4 E.W.M.	Town of Stanwood and East Stanwood, and vicinity	Municipal supply
	32 N.	3 E.W.M.		

The right to the use of the water aforesaid hereby confirmed is restricted to the lands or place of use herein described, except as provided in Section 39, Chapter 117, Session Laws 1917.

WITNESS the seal and signature of the State Supervisor of Hydraulics affixed this 17th *day of* February, 19 39.

Cleo Dorsheck

[redacted]

~~623~~ S

~~627~~ S

~~623~~ S

RECORDED
VOL. 285 OF Deeds
PAGE 467 REQUEST OF
Newood Water Co.
FEB 20 8 14 AM 1939
[illegible]
DEPUTY O N Johnson

COMPARED BY [illegible]

Permit No. 1234

Certificate of Water Right

Recorded in the office of State Supervisor of Hydraulics, Olympia, Washington, in Book No. 3 *of Water Right Certificates, on Page* 1164, *on the* 17th *day of* February, 19 39.

STATE OF WASHINGTON,
County of Snohomish } *ss.*

I certify that the within was received and duly recorded by me in Volume _____ *of Book of Water Right Certificates, Page* _____ *on the* _____ *day of* _____, 19____

_____

STATE PRINTING PLANT

wood 75

[redacted]

Bryant Lowell

S. F. No. 7381—1-49—1M. 20418.

VOL 473 PAGE 89

CERTIFICATE RECORD No. 1 2 PAGE No. 615

STATE OF WASHINGTON, COUNTY OF Snohomish

99183

Certificate of Ground Water Right

Issued in accordance with the provisions of Chapter 203, Laws of Washington for 1945, and the rules and regulations of the State Supervisor of Hydraulics thereunder.

THIS IS TO CERTIFY *That* STANWOOD WATER COMPANY

of Stanwood, Washington, *has made proof to the satisfaction of the State Supervisor of Hydraulics of Washington, of a right to the use of the ground waters of a* well

located within the NW¼ of NE¼ of Sec. 29, Twp. 32 N., Rge. 4 E.W.M.

for the purpose of municipal supply and industrial use

under Ground Water Permit No. 670 *issued by the State Supervisor of Hydraulics, and that said right to the use of said ground waters has been perfected in accordance with the laws of Washington, and is hereby confirmed by the State Supervisor of Hydraulics of Washington and entered of record in Volume* 2 *at page* 615; *that the right hereby confirmed dates from* February 20, 1948; *that the quantity of ground water under the right hereby confirmed for the purposes aforesaid, is limited to an amount actually beneficially used for said purposes, and shall not exceed* 2000 gallons per minute; 2400 acre-feet per year ~~for irrigation of xxxxxxxxxxxxxxxx~~

A description of the lands to which such ground water right is appurtenant, and the place where such water is put to beneficial use, is as follows:

Stanwood and East Stanwood and rural communities, Snohomish County, Washington.

The right to the use of the ground water aforesaid hereby confirmed is restricted to the lands or place of use herein described, except as provided in Sections 6 and 7, Chapter 122, Laws of 1929.

WITNESS the seal and signature of the State Supervisor of Hydraulics affixed this 14th *day of* May, 19 51.

Thomas J. Burtchaul

State Supervisor of Hydraulics

SEERING DAIA

Filed for Record MAY 15 [illegible] 3/19 P.

Ground Water Permit No. 670

CERTIFICATE OF GROUND WATER RIGHT

Recorded in the office of the State Supervisor of Hydraulics, Olympia, Washington,

in Book No. 2 of Ground Water

Right Certificates, on page 615, on the

14th day of May, 1951.

STATE OF WASHINGTON,
County of _____ } ss.

I certify that the within was received and duly recorded by me in Volume _____ of Book of Water Right Certificates, at

page _____, on the _____ day of

_____, 19____

_____

STATE PRINTING PLANT, OLYMPIA, WASH.

9916 / 627 / 623

VOL 473 PAGE 89

State of Wash

Victor Larson

Ref: C. M. Olsen
Stanwood Water Co.
Stanwood Wn.

75

S. P. No. 7381—1-49—1M. 20415.

Pure Water

CERTIFICATE RECORD NO. 2 PAGE NO. 616 VOL 473 PAGE 90

STATE OF WASHINGTON, COUNTY OF Snohomish

991872

Certificate of Ground Water Right

Issued in accordance with the provisions of Chapter 203, Laws of Washington for 1945, and the rules and regulations of the State Supervisor of Hydraulics thereunder.

THIS IS TO CERTIFY *That* STANWOOD WATER COMPANY

of Stanwood, Washington, *has made proof to the satisfaction of the State Supervisor of Hydraulics of Washington, of a right to the use of the ground waters of a* pump well

located within the NW¼ of SE¼ of Sec. 20, Twp. 32 N., Rge. 4 E.W.M.

for the purpose of municipal supply and industrial uses.

under Ground Water Permit No. 976 *issued by the State Supervisor of Hydraulics, and that said right to the use of said ground waters has been perfected in accordance with the laws of Washington, and is hereby confirmed by the State Supervisor of Hydraulics of Washington and entered of record in Volume* 2 *at page* 616; *that the right hereby confirmed dates from* February 11, 1949; *that the quantity of ground water under the right hereby confirmed for the purposes aforesaid, is limited to an amount actually beneficially used for said purposes, and shall not exceed* 150 gallons per minute; 121 acre-feet per year,

A description of the lands to which such ground water right is appurtenant, and the place where such water is put to beneficial use, is as follows:

Town of East Stanwood and Community of Cedarhome, Snohomish County, State of Washington.

The right to the use of the ground water aforesaid hereby confirmed is restricted to the lands or place of use herein described, except as provided in Sections 6 and 7, Chapter 122, Laws of 1929.

WITNESS the seal and signature of the State Supervisor of Hydraulics affixed this 14th *day of* May, 19 51.

Thos. J. Boothout

State Supervisor of Hydraulics

ENGINEERING DATA

Filed for Record MAY 15 1951 19 3:17 P.M.

Ground Water Permit No. 976

CERTIFICATE OF GROUND WATER RIGHT

Recorded in the office of the State Supervisor of Hydraulics, Olympia, Washington,

in Book No. 2 of Ground Water

Right Certificates, on page 616, on the

14th day of May, 1951.

STATE OF WASHINGTON,
County of _____ } ss.

I certify that the within was received and duly recorded by me in Volume _____ of Book of Water Right Certificates, at

page _____, on the _____ day of

_____, 19____

_____

STATE PRINTING PLANT, 3

VOL 473 PAGE 90

State of Wash.

Victor Larson

Mr. C.M. Olsen
Stanwood Water Co.
Stanwood, Wash.

15

—G. P. No. 7361—1-57—3M. 47618.

CERTIFICATE RECORD No. 6 PAGE No. 2986-A

1267684 STATE OF WASHINGTON, COUNTY OF Snohomish

Certificate of Ground Water Right

Single Well

Issued in accordance with the provisions of Chapter 263, Laws of Washington for 1945, and amendments thereto, and the rules and regulations of the State Supervisor of Water Resources thereunder.

THIS IS TO CERTIFY *That* STANWOOD WATER COMPANY

of Stanwood, Washington, *has made proof to the satisfaction of the State Supervisor of Water Resources of Washington, of a right to the use of the ground waters of a* well

located within the SE¼NE¼

Sec. 20, *Twp.* 32 *N., R.* 4 *E., W. M.*

for the purpose of domestic supply and industrial use

under and subject to provisions contained in Ground Water Permit No. 4111 *issued by the State Supervisor of Water Resources and that said right to the use of said ground waters has been perfected in accordance with the laws of Washington, and is hereby confirmed by the State Supervisor of Water Resources of Washington and entered of record in Volume* 6 *at page* 2986-A; *that the right hereby confirmed dates from* March 6, 1956; *that the quantity of ground water under the right hereby confirmed for the purposes aforesaid, is limited to an amount actually beneficially used for said purposes, and shall not exceed* 600 gallons per minute; 960 acre-feet per year for domestic supply and industrial use.

A description of the lands to which such ground water right is appurtenant, and the place where such water is put to beneficial use, is as follows:

Towns of Stanwood and East Stanwood, Snohomish County, Washington.

The right to the use of the ground water aforesaid hereby confirmed is restricted to the lands or place of use herein described, except as provided in Sections 6 and 7, Chapter 122, Laws of 1929.

WITNESS the seal and signature of the State Supervisor of Water Resources affixed this 14th *day of* January, 1958.

RECORDING DATE Filed for Record JAN 16 1958 11:04 M. Frodlich

1267684

VOL 638 PAGE 306 Deeds

VOL. OF
PAGE
REC. OF RECORDS

1953 JAN 16 AM 11 05

GEO. [illegible] AUDITOR
SNOHOMISH COUNTY, WASH.
DEPUTY

125

Ground Water Permit No. 4111

CERTIFICATE OF GROUND WATER RIGHT

Recorded in the office of the State Supervisor of Water Resources, Olympia, Washington, in Book No. 6 *of Ground Water Right Certificates, on page* 2986-A *on the* 14th *day of* January *1958*

STATE OF WASHINGTON,
County of _____ } ss.

I certify that the within was received and duly recorded by me in Volume _____ of Book of Water Right Certificates, at page _____, on the _____ day of _____, 19____

_____

STATE PRINTING PLANT — OLYMPIA, WASH., 1957

RECEIVED

APPLICATION FOR PERMIT TO APPROPRIATE PUBLIC WATERS OF THE STATE OF WASHINGTON

I have examined this application and find it is: ☐ ☑ correct. ☐ SURFACE WATER ☐ GROUND WATER

2/24/93 Steve Baker

$10.00 MINIMUM STATUTORY EXAMINATION FEE REQUIRED WITH APPLICATION

DATE SIGNATURE

WASHINGTON STATE DEPARTMENT OF ECOLOGY

(GRAY BOXES FOR OFFICE USE ONLY)

APPLICATION NO.	W.R.I.A.	COUNTY	PRIORITY DATE	TIME	ACCEPTED
G1-26984		Sno	2/24/93		

APPLICANT'S NAME — PLEASE PRINT

City of Stanwood Attention Bill Beckman, Water Manager

Robert C. Boudinot, Jr., Engineer

Bus. Tel. 206-629-9781
Home Tel.
Other Tel. 206-336-5751

ADDRESS (STREET)	(CITY)	(STATE)	(ZIP CODE)
10220 270th Street NW,	Stanwood	WA	98292

DATE & PLACE OF INCORPORATION IF APPLICANT IS A CORPORATION

1. SOURCE OF SUPPLY

IF SURFACE WATER

SOURCE (NAME OF STREAM, LAKE, SPRING, ETC.) (IF UNNAMED, SO STATE)

TRIBUTARY

IF GROUND WATER

SOURCE (WELL, TUNNEL, INFILTRATION TRENCH, ETC.) Well

SIZE AND DEPTH 12" Casing - 100' below sea level

2. USE

USE TO WHICH WATER IS TO BE APPLIED (DOMESTIC SUPPLY, IRRIGATION, MINING, MANUFACTURING, ETC.)

Municipal, Industrial

ENTER QUANTITY OF WATER REQUESTED USING UNITS OF: CUBIC FEET PER SECOND (CFS) _____ OR GALLONS PER MINUTE (GPM) 1000 gpm ACRE FEET PER YEAR

TIMES DURING YEAR WATER WILL BE REQUIRED

Continuous

IF IRRIGATION, NUMBER OF ACRES

IF DOMESTIC USE, NUMBER OF UNITS BY TYPE, E.G. 1-HOME, 1-MOBILE HOME, 2-CAMPSITES, ETC.

IF MUNICIPAL USE, ESTIMATED POPULATION 20 YEARS FROM TODAY 9500

DATE PROJECT WAS OR WILL BE STARTED

DATE PROJECT WAS OR WILL BE COMPLETED

3. LOCATION OF POINT OF DIVERSION/WITHDRAWAL

3A. IF IN PLATTED PROPERTY

LOT	BLOCK	OF (GIVE NAME OF PLAT OR ADDITION)	SECTION	TOWN	RANGE	ALSO, PLEASE ENCLOSE A COPY OF THE PLAT AND MARK THE POINT(S) OF WITHDRAWAL OR DIVERSION

3B. IF NOT IN PLATTED PROPERTY

ON ACCOMPANYING SECTION MAPS, ACCURATELY MARK AND IDENTIFY EACH POINT OF DIVERSION. SHOW NORTH-SOUTH AND EAST-WEST DISTANCES FROM NEAREST SECTION CORNER OR PROPERTY CORNER

ALSO, ENTER BELOW THE DISTANCES FROM THE NEAREST SECTION OR PROPERTY CORNER TO THE DIVERSION OR WITHDRAWAL.

LOCATED WITHIN (SMALLEST LEGAL SUBDIVISION)	SECTION	TOWNSHIP N.	RANGE (E. OR W.) W.M.	COUNTY
SW 1/4 of NE 1/4	20	32 N	4 E	Snohomish

4. DO YOU OWN THE LAND ON WHICH THIS SOURCE IS LOCATED. IF NOT, INSERT NAME & ADDRESS OF OWNER

Stanwood School District P. O. Box 430 Stanwood, WA 98292

5. LEGAL DESCRIPTION OF PROPERTY ON WHICH WATER IS TO BE USED

ATTACH A COPY OF THE LEGAL DESCRIPTION OF THE PROPERTY (ON WHICH THE WATER WILL BE USED) TAKEN FROM A REAL ESTATE CONTRACT, PROPERTY DEED OR TITLE INSURANCE POLICY. OR, COPY CAREFULLY IN THE SPACE BELOW.

City of Stanwood water service area, all of Sections 17, 18, 19, 20, 29, 31, 32, and portions of Sections 16, 21, 28 and 33 of Township 32 North, Range 4 East, W.M.

APPLICATION

WHAT IS YOUR INTEREST IN THE PROPERTY ON WHICH THE WATER IS TO BE USED (PROPERTY OWNER, LESSEE, CONTRACT PURCHASER, ETC.)

City of Stanwood water service area

ARE THERE ANY EXISTING WATER RIGHTS RELATED TO THE LAND ON WHICH THE WATER IS TO BE USED (INCLUDING WATER PROVIDED BY IRRIGATION DISTRICTS OR DITCH COMPANIES.) [X] YES [ ] NO

IF YES, FROM WHAT SOURCE (i.e. SURFACE OR GROUND WATER) AND UNDER WHAT AUTHORITY

GW Permit Numbers .670, .967, .1234, .4111

6. DESCRIPTION OF SYSTEM PROPOSED OR INSTALLED

(FOR EXAMPLE: SIZE OF PUMP, CAPACITY OF PUMP, PUMP MOTOR HORSE POWER, PIPE DIAMETER, NUMBER OF SPRINKLERS, ETC.

Pump: 80 HP 1000 gpm at 450' head; 12" Casing Pipe

REMARKS

7.

8. COMPLETE THIS SECTION ONLY IF THIS APPLICATION INCLUDES IRRIGATION AS A USE

IN ORDER TO IMPLEMENT THE PROVISIONS OF INITIATIVE MEASURE NUMBER 59, THE FAMILY FARM WATER ACT WHICH WAS PASSED BY THE VOTERS ON NOVEMBER 3, 1977, WE MUST ASK THE FOLLOWING QUESTIONS:

DOES THE TOTAL NUMBER OF ACRES IN WHICH YOU HAVE CONTROLLING INTEREST IN THE STATE OF WASHINGTON EXCEED 2000 ACRES FOR THE FOLLOWING THREE CATEGORIES:

1. LANDS THAT ARE BEING IRRIGATED UNDER WATER RIGHTS ACQUIRED AFTER DECEMBER 8, 1977. YES [ ] NO [ ]
2. LANDS THAT MAY BE IRRIGATED UNDER APPLICATIONS NOW ON FILE WITH THE DEPARTMENT OF ECOLOGY. YES [ ] NO [ ]
3. LANDS THAT MAY BE IRRIGATED UNDER THIS APPLICATION. YES [ ] NO [ ]

IF 10 ACRE-FEET OR MORE OF WATER IS TO BE STORED AND/OR IF THE WATER DEPTH WILL BE 10 FEET OR MORE AT THE DEEPEST POINT, A STORAGE PERMIT MUST BE FILED IN ADDITION TO THIS PERMIT. THESE FORMS CAN BE SECURED TOGETHER WITH INSTRUCTIONS FROM THE DEPARTMENT OF ECOLOGY.

SIGNATURES

Robert M. Larson - Mayor
APPLICANT'S SIGNATURE

Stanwood School Dist. #401
LEGAL LANDOWNERS NAME (PLEASE PRINT)

Raymond L. Reid
LEGAL LANDOWNER'S SIGNATURE (OWNER OF PROPERTY DESCRIBED IN ITEM NUMBER 5)

P.O. Box 430 Stanwood, WA 98292
LEGAL LANDOWNER'S ADDRESS

FOR OFFICE USE ONLY

STATE OF WASHINGTON
DEPARATMENT OF ECOLOGY } ss.

This is to certify that I have examined this application together with the accompanying maps and data, and am returning it for correction or completion as follows: .....

In order to retain its priority date, this application must be returned to the Department of Ecology, with corrections, on or before ..... *19*.....

Witness my hand this ..... *day of* ..... *19*.....

Department of Ecology

ECY 040-1-14
Rev. 8/91 F

SECTION MAP

Sec. 20 Twp. 32 N. R. 4 E W.M.

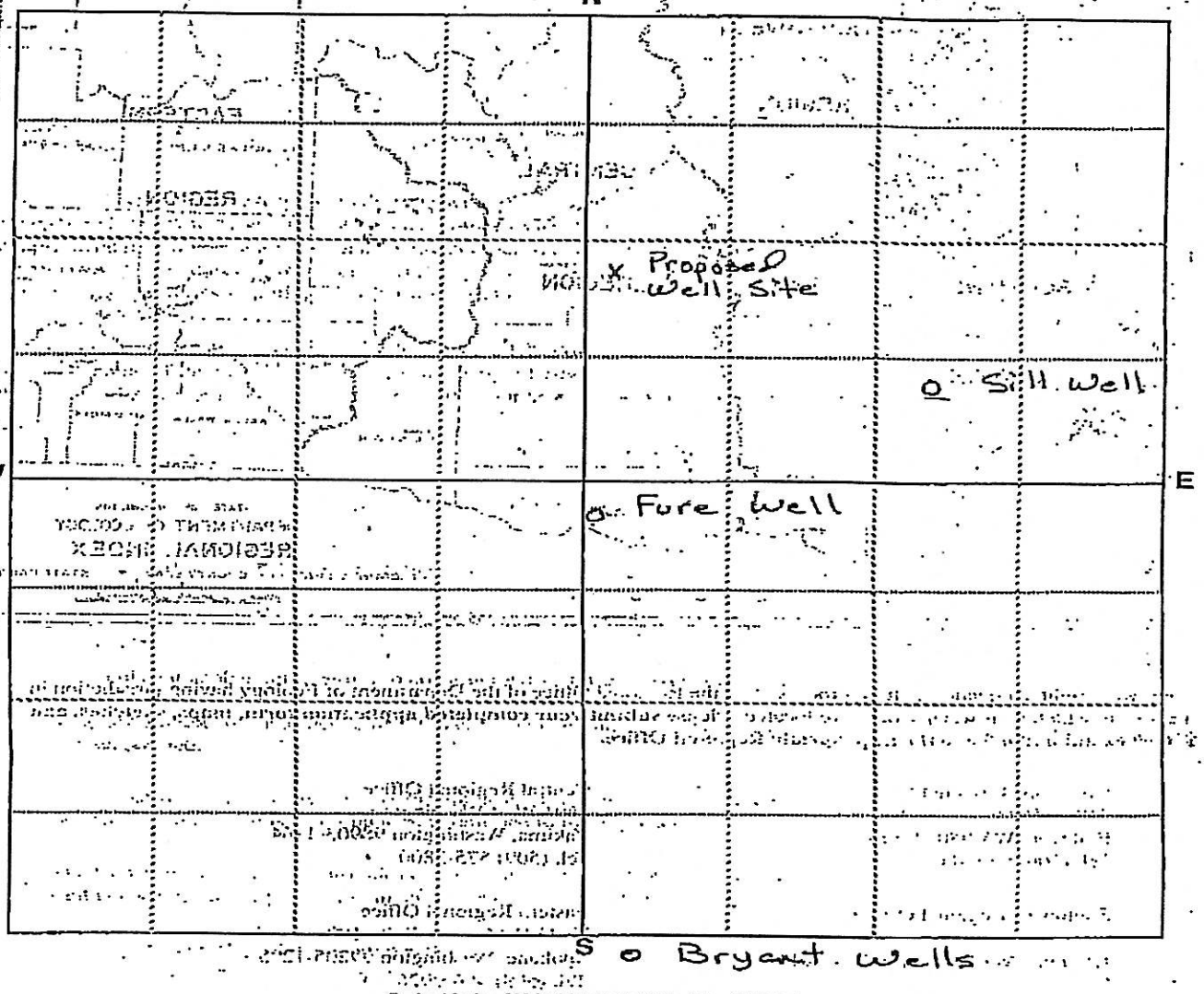

Scale: 1 inch = 800 feet (each small square = 10 acres)

Show by a cross (X) the location of point of diversion (surface water source) or point of withdrawal (ground water source). For ground water applications, show by a circle (O) the locations of other wells or works within a quarter of a mile.
Indicate traveling directions from nearest town in space below.

Site is approximately 3.5 miles East, Northeast of downtown Sranwood.

Detach here

Fold along scale

0 400 800 1,200 1,600 2,000 2,400 2,800 3,200 3,600 4,000 4,400 4,800 5,200

Detach this scale at the perforation, fold excess paper under or cut off excess by cutting along the scale line. This scale corresponds to the SECTION MAP above. You can read feet directly from this scale to outline property and locate points of diversion or withdrawal on the SECTION MAP. Enclose this map along with the application and $10.00 examination fee.

APPENDIX J

WATER QUALITY MONITORING PLAN

Water Quality Monitoring Plan

INTRODUCTION

This Water Quality Monitoring Plan presents the requirements for monitoring water quality at the sources and in the distribution system in accordance with the drinking water regulations contained in WAC 246-290-300. This plan also provides a summary of the existing water system facilities and operation.

Existing Water System Description

Water System Information

The City of Stanwood (City) is a municipal corporation that owns and operates a public water system within its corporate boundaries. Water system data on file at the Department of Health (DOH) for the City's system is shown in **Table 1**.

Table 1
Water System Information

Information Type	Description
System Type	Group A - Community - Public Water System
System Name	City of Stanwood
County	Snohomish
DOH System ID Number	83650H
Owner Number	5635
Address	10220 – 270th Street NW, Stanwood, WA 98292
Contact	Mr. Andrew Bullington, Public Works Director
Contact Phone Number	(360) 629-9781

Water System Operation and Control

The existing water system is divided into seven pressure zones, due to the wide range of elevations that are served (between 0 and 240 feet). The 125 Zone is supplied with water from the Hatt Slough Springs, which operate continuously, and indirectly from the 297 Zone through pressure reducing valve stations.

The 297 Zone is supplied with water from Bryant Well Nos. 1 and 2, the Cedarhome Well and the Fure Well. The operation of the Cedarhome and Bryant Wells is controlled by the water level in the

Knittle Reservoirs. The Fure Well only operates during emergency conditions. The 297 Zone can supply water to the 125 Zone through the State Route (SR) 532 and Pioneer Highway pressure reducing valve (PRV) during localized drops in pressure, such as fire flow. The Bailey Booster Pump Station can also be used to transfer water from the 125 Zone to the 297 Zone. Four of the smaller pressure zones are supplied by PRV's with water from the 297 Zone.

The 365 Zone is a closed zone (i.e., without storage) that is supplied by the Cedarhome and Knittle Booster Pump Stations. One booster pump station operates continuously to maintain pressures in the zone. Once the Cedarhome Reservoir is completed in fall 2009, the pressures in the zone and the operation of the booster pump stations will be regulated by the water level in the reservoir.

Pressure Zones

A list of the City's existing pressure zones and their respective maximum hydraulic elevations is presented in **Table 2**. The table also shows the estimated connections and population in each pressure zone in 2007, based on a review of 2007 water supply data.

Table 2
Pressure Zones

Name	Maximum Hydraulic Elevation	Water Demand Allocation	Estimated Connections	Estimated Population
365 Zone	365 feet	6%	132	396
297 Zone	297 feet	48%	1095	3,297
265 Zone	265 feet	2%	46	137
255 Zone	255 feet	2%	51	154
252 Zone	252 feet	0%	9	26
242 Zone	242 feet	2%	43	130
125 Zone	125 feet	40%	917	2,760
Totals			2,292	6,901

Water Sources

A list of the City's existing water sources is presented in **Table 3**.

Table 3
Water Sources

Well	Pressure Zone	Year Drilled	Existing Pumping Capacity (gpm)	Well Depth (feet)	Well Diameter (inches)	Pump Type	Pump Motor Size (hp)	Water Treatment[2]	Control Facility
Bryant Well No. 1	297 Zone	1948	1,350	250	12	Turbine	75	Cl_2/Mn/H_2S/As	Knittle Tanks
Bryant Well No. 2[1]	297 Zone	1966	350	200	12	Turbine	75	none	Knittle Tanks
Fure Well	297 Zone	1951	100	157	12	Turbine	15	none	Continuous
Hatt Slough Springs	125 Zone	1934	350	n/a	n/a	Centrifugal	10	Cl_2	Continuous
Cedarhome Well	297 Zone	2008	600	490	12 & 16	Turbine	100	Cl_2	Knittle Tanks

1 = Bryant Well No. 2 is scheduled for replacement.

2 = Cl_2: chlorination; Mn: manganese filtration; H_2S: hydrogen sulfide removal; As: arsenic removal.

Water Storage

A list of the City's existing water storage facilities is presented below in **Table 4**.

Table 4
Water Storage Facilities

Reservoir Name	Pressure Zone	Year Constructed	Material	Capacity (MG)	Diameter (feet)	Base Elevation (feet)	Overflow Elevation (feet)	Overall Height (feet)
Knittle No. 1	297 Zone	1990	Concrete	0.20	26	247.0	297.0	50.0
Knittle No. 2	297 Zone	1997	Steel	1.00	61	249.0	297.0	48.0
Cedarhome	365 Zone	2009	Composite	0.55	53	329.5	365.0	35.5
Bailey No. 1	125 Zone	1989	Concrete	0.20	45	108.0	125.0	17.0
Bailey No. 2	125 Zone	1989	Concrete	0.20	45	108.0	125.0	17.0

Pump Stations

A list of the City's existing booster pump stations is presented in **Table 5**.

Table 5
Booster Pump Stations

Booster Pump Station	Suction Pressure Zone	Discharge Pressure Zone	Year Constructed	Existing Pumping Capacity (gpm)	Number of Pumps	Pump Type	Pump Motor Size (hp)
Bailey BPS	125 Zone	297 Zone	before 1969	800	4	Centrifugal	(4) 15
Cedarhome BPS	297 Zone	365 Zone	2006	1,000	3	Centrifugal	(3) 20
Knittle BPS	297 Zone	365 Zone	1998	1,360	4	Centrifugal	(1) 3, (2) 5, (1) 50

Pressure Reducing Stations

A list of the City's existing pressure reducing stations is presented below in **Table 6**.

Table 6
Pressure Reducing Stations

Name	Upper Zone (From)	Lower Zone (To)	Current Status
SR 532 & Pioneer Hwy	297	125	Active
272nd & 81st	297	242	Active
288th & 89th	297	252	Active
280th & 83rd	297	255	Active
282nd & Nordic Wy	297	255	Active
276th St & 80th Dr	297	265	Active
Copper Station	365	297	Active
277th & 71st	365	297	Active
281st & 70th	365	297	Active
278th & 78th	365	297	Active

Water Treatment

The City transitioned to system-wide chlorination in 2008. The Cedarhome Well, Bryant Well No. 1 and Hatt Slough Springs are currently chlorinated. Chlorination at the Hatt Slough Springs source is being performed as a precautionary measure, even though harmful bacteria have never been detected. The spring source was recently tested and determined not to be under the direct influence of surface water. The Bailey Booster Pump Station is equipped with chlorination equipment for use

in an emergency situation. Historically, the water quality at all of the sources has been excellent, aside from slightly higher than allowable manganese levels at Bryant Well No. 1 and Fure Well, and slightly higher than allowable arsenic levels at Bryant Well No. 1 prior to the completion of the Bryant Well Field Treatment Facility.

The Bryant Well Field Treatment Facility currently treats Bryant Well No. 1 for arsenic, manganese and hydrogen sulfide using an oxidation and filtration process. This facility will also treat the future Bryant Well No. 2 replacement well. Three chemicals are initially added to the raw water: sodium hypochlorite, ferric chloride and sulfuric acid. A low strength 0.8 percent sodium hypochlorite solution is created on-site using water, salt and a chemical reactor. The ferric chloride and sulfuric acid are added to assist with arsenic removal and are purchased in 55-gallon drums. All chemicals are injected into the raw water through metering pumps. In addition to feeding chemicals, an aeration system adds dissolved oxygen from the ambient air to the raw water to reduce hydrogen sulfide concentrations. After chemical addition, the raw water is filtered through a pressure vessel containing anthracite and greensand media to remove manganese, iron and arsenic compounds. A contact loop is provided after filtration to ensure that chlorine fully reacts with ammonia and reaches breakpoint before the treated water reaches the first customer downstream of the plant.

The Cedarhome Well is equipped with a sodium hypochlorite on-site generation system and a contact loop similar to the Bryant Well Field Treatment Facility. No other chemicals are added to this source.

Chlorination is achieved at Hatt Slough Springs by continuous injection of sodium hypochlorite (liquid chlorine) into the system during operation of the pumps at the facility. The 12.5 percent sodium hypochlorite solution is created with 1 gallon of sodium hypochlorite per 8 gallons of water. The chlorination equipment at the Hatt Slough Springs and Bailey Booster Pump Station sites consists of a 50-gallon dilution tank and metering pump for the disinfection process.

The Fure Well is not frequently operated because of its limited capacity; therefore, it is not currently chlorinated.

SOURCE WATER QUALITY MONITORING

The City is required to perform water quality monitoring at each of its active sources for inorganic chemicals and physical substances, organic chemicals, unregulated inorganic and organic chemicals, and radionuclides. The monitoring requirements that the City must comply with are specified in WAC 246-290-300. Since all of the City's water sources are considered groundwater sources, the groundwater system monitoring requirements apply. **Table 7** summarizes the source water quality monitoring requirements for the next several years. The table is based on information available at the time that this document was prepared and may change in the future.

Table 7
Monitoring Schedule for 2008 through 2013

When	Monitor	Monitoring Group	Test Method	Upon Violation
2008				
Aug-08	All Active Sources	Nitrate	NIT	Quarterly for 1 Year
2009				
Mar-09	Distribution System	Asbestos	ABS	Quarterly for 2 Quarters
Jul-09	All Active Sources	SOCs	SOC - 515.2, 525.2, 531.1	Quarterly for 2 Quarters
Aug-09	All Active Sources	Nitrate	NIT	Quarterly for 1 Year
Sep-09	Distribution System	Lead and Copper	LCR	(2)-6 Mo. Periods (40 sites ea.)
Oct-09	All Active Sources	SOCs	SOC - 515.2, 525.2, 531.1	Quarterly for 2 Quarters
2010				
Mar-10	All Active Sources	IOC and Physical	IOC	Quarterly for 2 Quarters
Jul-10	Distribution System	Volatile Organic Chemicals	VOC - 524.2	Quarterly for 2 Quarters
Aug-10	All Active Sources	Nitrate	NIT	Quarterly for 1 Year
2011				
Aug-11	Distribution System	Radionuclides	RAD	Quarterly until less than MCL
Aug-11	All Active Sources	Nitrate	NIT	Quarterly for 1 Year
2012				
Mar-12	Distribution System	Asbestos	ABS	Quarterly for 2 Quarters
Jul-12	All Active Sources	SOCs	SOC - 515.2, 525.2, 531.1	Quarterly for 2 Quarters
Aug-12	All Active Sources	Nitrate	NIT	Quarterly for 1 Year
Sep-12	Distribution System	Lead and Copper	LCR	(2)-6 Mo. Periods (40 sites ea.)
Oct-12	All Active Sources	SOCs	SOC - 515.2, 525.2, 531.1	Quarterly for 2 Quarters
2013				
Mar-13	All Active Sources	IOC and Physical	IOC	Quarterly for 2 Quarters
Jul-13	Distribution System	Volatile Organic Chemicals	VOC - 524.2	Quarterly for 2 Quarters
Aug-13	All Active Sources	Nitrate	NIT	Quarterly for 1 Year

Monitoring Requirements and Procedures

Inorganic Chemical and Physical – A minimum of one sample shall be taken after treatment at the entry point to the distribution system for each source. Monitoring for primary and secondary inorganic chemical and physical substances, except for nitrate and asbestos, shall be accomplished once every three years. If a maximum contaminated level (MCL) is exceeded, quarterly sampling is required for at least two quarters.

Monitoring for nitrate shall be accomplished once per year. The repeat monitoring frequency shall be quarterly for at least one year following any one sample in which the concentration is greater than or equal to 50 percent of the MCL for nitrate or nitrite.

Monitoring for asbestos is required once every nine years. Systems not vulnerable to asbestos contamination at the source or in the distribution system (due to asbestos cement pipe) may apply to the state for a waiver of the monitoring requirements. Since approximately 23 percent of the City's

distribution system contains asbestos cement pipe, asbestos monitoring is required. A sample must be taken at a tap served by an asbestos cement pipe where asbestos contamination is most likely to occur. If the MCL is exceeded, quarterly sampling is required for at least two quarters.

Volatile Organic Chemicals – A minimum of one sample shall be taken after treatment at the entry point to the distribution system for each source. Monitoring for volatile organic chemicals shall be accomplished once every three years for each compliance period. If an MCL is exceeded, quarterly sampling is required for at least two quarters. The state may then allow annual monitoring if the results are satisfactory. After three consecutive annual samples that comply with the MCLs, a waiver for reduced monitoring (once every three-year compliance period) may be applied for again.

Synthetic Organic Chemicals – A minimum of one sample shall be taken after treatment at the entry point to the distribution system for each source. Monitoring for synthetic organic chemicals (SOCs) shall be accomplished once every three years for each compliance period if a monitoring waiver is not provided by the state. If an MCL is exceeded, quarterly sampling is required for at least two quarters. The state may then allow annual monitoring if the results are satisfactory. After three consecutive annual samples that comply with the MCLs, a waiver for reduced monitoring may be applied for again. The City was granted a monitoring waiver for the 2008 through 2010 compliance periods for dioxin, endothall, glyphosphate, EDB and other soil fumigants but is required to monitor for herbicides, general pesticides and insecticides.

Unregulated Inorganic Chemicals – Sulfate is the only unregulated inorganic chemical that must be monitored under the current state regulations. One sample shall be taken after treatment at the entry point to the distribution system for each source at least once every five years, unless a waiver is granted by the state. The City monitors for sulfate when monitoring is done for regulated inorganic compounds.

Unregulated Volatile Organic Chemicals – One sample shall be taken after treatment at the entry point to the distribution system for each source at least once every five years. The City monitors for unregulated volatile organic chemicals when samples for regulated volatile organic chemicals are taken.

Unregulated Synthetic Organic Chemicals – One sample shall be taken after treatment at the entry point to the distribution system for each source at least once every five years, unless a waiver is granted by the state. The City monitors for unregulated synthetic organic chemicals when samples for regulated synthetic organic chemicals are taken.

Radionuclides – A minimum of one sample shall be taken after treatment at the entry point to the distribution system for each source. Initial monitoring for gross alpha particle radioactivity, radium-226 and radium-228 required four consecutive quarterly samples. Monitoring thereafter requires four consecutive quarterly samples at least once every 48 months. The analysis for radium-226 and radium-228 may be omitted, if the results from the gross alpha particle radioactivity analysis are less than 5 pCi/L. In addition, if the results of the initial analysis are less than half of the established MCL, the required monitoring may be reduced to a single sample collected every 48 months. The initial radionuclide samples collected in 1999 resulted in levels much less than the MCL, if detectable at all, and the City may now monitor for radionuclides once every four years.

DISTRIBUTION SYSTEM WATER QUALITY MONITORING

The City is required to perform water quality monitoring within the distribution system for coliform bacteria, disinfectant (chlorine) residual concentration, disinfection by-products, lead and copper, and asbestos in accordance with Chapter 246-290 WAC.

Monitoring Requirements and Procedures

Coliform Bacteria Routine Sampling – Specific requirements are contained in WAC 246-290-300. The City has been collecting a minimum of six samples per month from different locations throughout the system, based on previous estimates of the population served. Based on the most recent estimates, a total of eight samples should now be collected. If a coliform presence is detected in a sample, eight samples must be taken starting the following month. The City will begin taking eight samples a month to obtain an adequate representation of the pressure zones, reservoirs and source distribution.

Table 8 lists the addresses and schedule of the City's routine sampling locations, including the upstream and downstream sampling locations in the event that repeat sampling is necessary. A total of eight samples will be collected each month in accordance with the schedule shown in the table. The sampling sites are different than the previous month's sampling sites and are rotated throughout the system to achieve a thorough sampling of all parts of the system. The schedule will repeat every four months. The sample sites are also shown in **Figure 1** and correspond to the assigned numbers in the table.

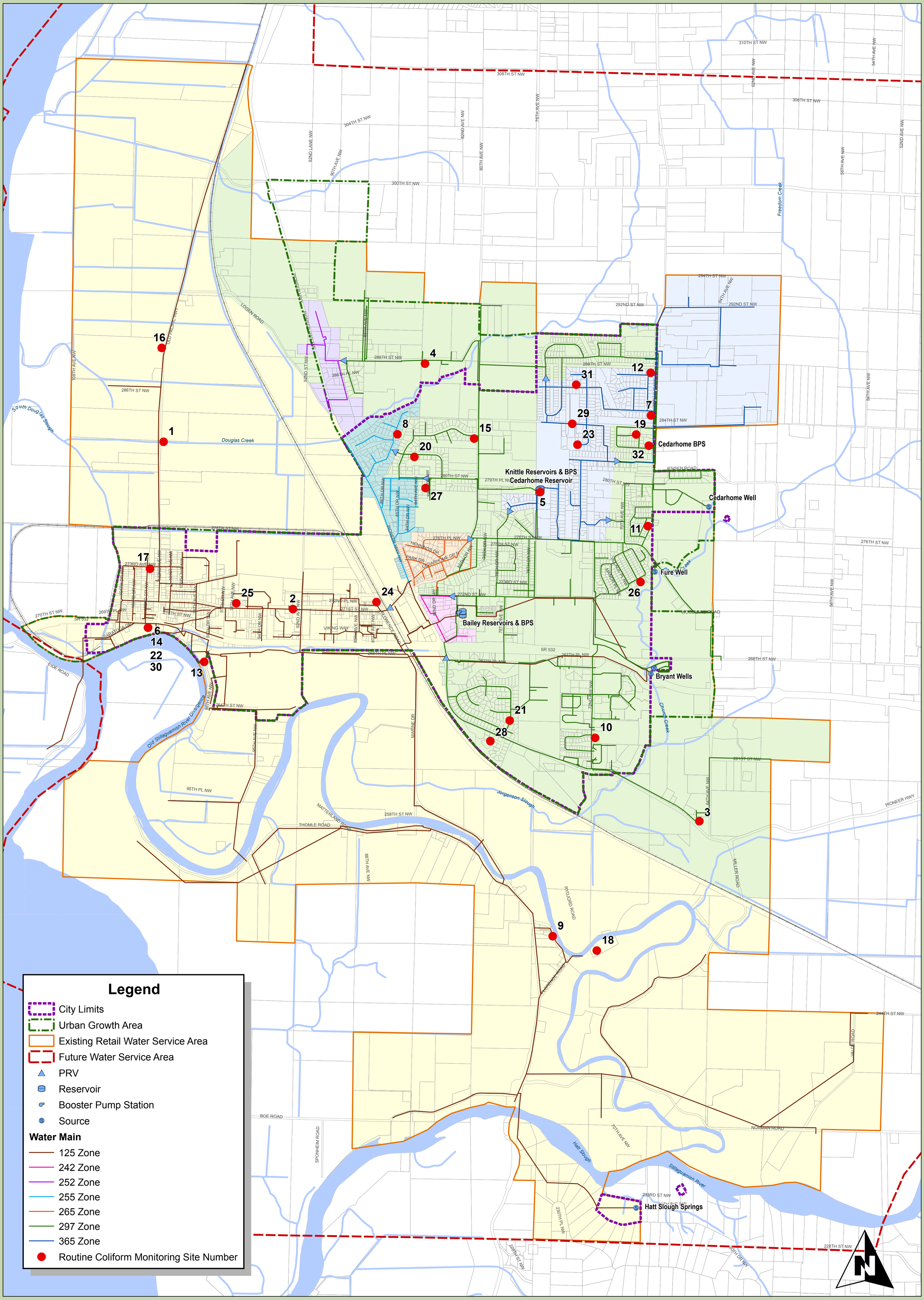

CITY OF STANWOOD
COMPREHENSIVE WATER SYSTEM PLAN

FIGURE 1
COLIFORM MONITORING SITES

1 in = 1,000 ft

0 1,000 2,000

DRAWING IS NOT TO SCALE
IF BAR IS NOT 2" LONG

J:\data\STA\107-088\GIS\MAPS\STA-WSP-FigJ-1.mxd DATE REVISED: DEC 4, 2009 BY: MRC

Table 8
Coliform Monitoring Sampling Locations and Schedule

Number	Routine, Upstream, or Downstream	Address	Pressure Zone
		January, May and September	
1	**R**	**28119 Old Pacific Hwy**	**125 Zone**
	US	28015 Old Pacific Hwy	125 Zone
	DS	28527 Old Pacific Hwy	125 Zone
2	**R**	**92nd Ave Sample Station**	**125 Zone**
	US	9200 271st St NW	125 Zone
	DS	27020 92nd AVE NW	125 Zone
3	**R**	**6419 Pioneer Hwy**	**297 Zone**
	US	25621 64th Ave NW	297 Zone
	DS	6510 Pioneer Hwy	297 Zone
4	**R**	**Schenk Packing Sample Station**	**297 Zone**
	US	8525 288th St NW	297 Zone
	DS	28801 80th AVE NW	297 Zone
5	**R**	**Knittle Booster Station**	**365 Zone**
	US	27929 80th AVE NW	365 Zone
	DS	27932 74th AVE NW	365 Zone
6	**R**	**Twin City Foods Sample Station**	**125 Zone**
	US	9828 SR 532	125 Zone
	DS	10320 SR 532	125 Zone
7	**R**	**6800 285th St NW**	**365 Zone**
	US	6810 285th St NW	365 Zone
	DS	28505 68th AVE NW	365 Zone
8	**R**	**28305 Nordic Way**	**255 Zone**
	US	28309 Nordic Way	255 Zone
	DS	28201 Nordic Way	255 Zone
		February, June and October	
9	**R**	**24824 Florence Rd**	**125 Zone**
	US	24804 Florence Rd.	125 Zone
	DS	24904 Florence Rd.	125 Zone
10	**R**	**26211 72nd Ave.**	**297 Zone**
	US	7207 262nd St. NW	297 Zone
	DS	26317 72nd Ave	297 Zone
11	**R**	**Ridgeland Estates Sample Station**	**297 Zone**
	US	6803 278th St NW	297 Zone
	DS	27703 68th AVE NW	297 Zone
12	**R**	**6801 287th Pl NW**	**365 Zone**
	US	6903 287th Pl NW	365 Zone
	DS	28705 68th AVE NW	365 Zone
13	**R**	**Public Works Shop Sample Station**	**125 Zone**
	US	9730 98th Ave NW	125 Zone
	DS	26700 Pioneer Hwy	125 Zone
14	**R**	**Twin City Foods Sample Station**	**125 Zone**
	US	9828 SR 532	125 Zone
	DS	10320 SR 532	125 Zone
15	**R**	**8002 283rd St NW**	**297 Zone**
	US	8006 283rd St NW	297 Zone
	DS	28217 80th Ave NW	297 Zone
16	**R**	**28810 Old Pacific Hwy**	**125 Zone**
	US	29122 Old Pacific Hwy	125 Zone
	DS	28627 Old Pacific Hwy	125 Zone

Table 8 (Continued)
Coliform Monitoring Sampling Locations and Schedule

Number	Routine, Upstream, or Downstream	Address	Pressure Zone
		March, July and November	
17	**R**	**10227 279rd Pl NW**	**125 Zone**
	US	27310 102nd AVE NW	125 Zone
	DS	27304 102nd DR NW	125 Zone
18	**R**	**24711 Florence Rd.**	**125 Zone**
	US	24712 Florence Rd.	125 Zone
	DS	24720 Florence Rd.	125 Zone
19	**R**	**Hawks Prairie Sample Station**	**297 Zone**
	US	6908 283rd Pl NW	297 Zone
	DS	28301 69th AVE NW	297 Zone
20	**R**	**8546 282nd St NW**	**297 Zone**
	US	8550 282nd St NW	297 Zone
	DS	8442 282nd St NW	297 Zone
21	**R**	**Fox Hill Sample Station**	**297 Zone**
	US	7806 263rd Pl NW	297 Zone
	DS	26204 77th AVE NW	297 Zone
22	**R**	**Twin City Foods Sample Station**	**125 Zone**
	US	9828 SR 532	125 Zone
	DS	10320 SR 532	125 Zone
23	**R**	**7306 282nd St. NW**	**365 Zone**
	US	7307 282nd St NW	365 Zone
	DS	7304 282nd St NW	365 Zone
24	**R**	**8629 271st St. NW**	**125 Zone**
	US	8701 271st St NW	125 Zone
	DS	8500 Cedarhome Dr. N.	125 Zone
		April, August and December	
25	**R**	**9619 271st St NW**	**125 Zone**
	US	9701 271st St NW	125 Zone
	DS	9605 271st St NW	125 Zone
26	**R**	**6908 Church Creek Loop**	**297 Zone**
	US	6912 Church Creek Loop	297 Zone
	DS	6904 Church Creek Loop	297 Zone
27	**R**	**27908 83rd Dr NW**	**297 Zone**
	US	27828 83rd Dr NW	297 Zone
	DS	27914 83rd Dr NW	297 Zone
28	**R**	**7804 260th St NW**	**297 Zone**
	US	7800 260th St NW	297 Zone
	DS	7806 260th St NW	297 Zone
29	**R**	**284th Sample Station**	**365 Zone**
	US	7407 284th St NW	365 Zone
	DS	28400 72nd Dr NW	365 Zone
30	**R**	**Twin City Foods Sample Station**	**125 Zone**
	US	9828 SR 532	125 Zone
	DS	10320 SR 532	125 Zone
31	**R**	**7221 286th Pl NW**	**365 Zone**
	US	7229 286th Pl NW	365 Zone
	DS	28600 72nd Dr NW	365 Zone
32	**R**	**Cedarhome Booster Station**	**297 Zone**
	US	28230 68th Ave NW	297 Zone
	DS	6800 282nd Pl NW	297 Zone

Coliform Bacteria Repeat Sampling – In the event that a sample tests positive for coliform, a repeat sample shall be taken at the same location as the suspect sample and two additional samples shall be taken within five service connections upstream and downstream of the suspect sample. These repeat samples shall be taken by the end of the next business day after receiving the unsatisfactory results. If the results conclude that an MCL is exceeded (i.e., coliform are present in two or more samples for the month, including repeat samples), the City shall proceed with public notification in accordance with WAC 246-290-495.

Disinfectant Residual Concentration – Specific requirements are contained in WAC 246-290-451 for systems using groundwater that is not under the influence of surface water (i.e., not GWI). The City's chlorination goal is to maintain a residual disinfectant concentration of at least 0.5 mg/L throughout the distribution system. With the current operation of Bryant Well No. 1, the free chlorine residual must be at least 0.14 mg/L at the end of the Bryant Well Field Treatment Facility contact pipeline to meet DOH's CT requirement of 6.

Samples collected and submitted for coliform testing shall also be tested for disinfectant residual concentration to ensure the disinfectant residual meets the regulatory requirements and achieves the target levels planned by the City.

Lead and Copper – Specific requirements are contained in Title 40, Parts 141.86, 141.87 and 141.88 of the Code of Federal Regulations (CFR). Initial monitoring, beginning July 1, 1993, required 20 samples for each 6-month monitoring period for the City's population. After two consecutive six-month monitoring periods of meeting the lead and copper action levels, ten samples taken during June, July, August or September were required once per year. After three consecutive years of monitoring and meeting the lead and copper action levels, ten samples taken during June, July, August or September are required every three years. However, the City's population has increased such that the sampling requirement is now 20 samples every three years.

The City completed the sampling requirements for the two consecutive six-month monitoring periods during 1993 and 1994. Twenty samples were also collected during 1996. All samples tested well below the action levels and qualified the City for accelerated reduced monitoring, which allows a three-year monitoring schedule.

Sample sites shall be selected based on the known existence of lead pipes, copper pipes and copper pipes with lead solder in accordance with 40 CFR 141.86(a). All samples, except for lead service line samples, shall be "first draw tap samples" taken at a cold water tap in which water has not been drawn from the tap for at least six hours. Lead service line samples shall be collected in one of three ways in accordance with 40 CFR 141.86(b). The locations of future sample sites shall be the same as past sample sites, unless unavoidable conditions prevent sampling at the same locations.

Fluoride Concentration – Specific requirements are contained in WAC 246-290-460 for systems that are fluoridating drinking water. The City does not currently fluoridate its water. However, if the City decides to fluoridate its water supply in the future, the concentration of fluoride shall be maintained in the range of 0.8 through 1.3 mg/L. Determinations of fluoride concentrations shall be made daily, and reports of the analyses shall be submitted to DOH within ten days of the end of the reporting month. Monthly check samples shall be taken downstream of each fluoride injection

point, at the first sample tap where adequate mixing has occurred.

Disinfection By-products – The City's Initial Distribution System Evaluation Standard Monitoring Plan follows.

IDSE Standard Monitoring Plan

I. GENERAL INFORMATION

A. PWS Information*

B. Date Submitted* 1/29/2009

PWSID: 83650H
PWS Name: City of Stanwood
PWS Address: 10220 270th St NW
City: Stanwood State: WA Zip: 98292
Population Served: 7226

System Type: (X)		Source Water Type: (X)		Buying / Selling Relationships: (X)	
X	CWS		Subpart H		Consecutive System
	NTNCWS	X	Ground		Wholesale System
				X	Neither

C. PWS Operations

Residual Disinfectant Type: (X)

X Chlorine ____ Chloramines ____ Other: ____

Number of Disinfected Sources:

____ Surface ____ GWUDI 3 Ground ____ Purchased

D. Contact Person*

Name: Kevin Hushagen
Title: Interim Utility Superintendent
Phone #: 360-629-9782 Fax #: 360-629-4929
E-mail: kevin@ci.stanwood.wa.us

II. IDSE REQUIREMENTS*

A. Number of Monitoring Sites		B. Schedule		C. Compliance Monitoring Frequency	
			Schedule 1		
			Schedule 2		
1	Highest TTHM		Schedule 3	X	Every 90 days (4 monitoring periods)
1	Highest HAA5	X	Schedule 4		
2	**Total**				

IDSE Standard Monitoring Plan

IV. JUSTIFICATION OF STANDARD MONITORING SITES*

Standard Monitoring Site ID (from map)[1]	Site Type	Justification
1	____ ____ X High TTHM site ____	**Circle appropriate criteria that demonstrate high water age.** 1) Downstream of storage tank or reservoir that is located in your distribution system. 2) Located after booster disinfection. 3) Near (but not at) dead end, on smaller line. 4) Low disinfectant residual, or residual concentration significantly less than avearage. 5) Far end of distribution system.
2	____ ____ ____ X High HAA5 site	**IF YOUR SYSTEM DOES NOT EXPERIENCE HIGH BIOLOCIGAL ACTIVITY IN YOUR DISTRIBUTION SYSTEM, circle appropriate criteria that demonstrate high water age:** 1) Downstream of storage tank or reservoir. 2) Located after booster disinfection. 3) Near (but not at) dead end, on smaller line. 4) Low disinfectant residual, or residual concentration significantly less than average. 5) Far end of distribution system. IF YOUR SYSTEM DOES EXPERIENCE HIGH BIOLOGICAL ACTIVITY IN YOUR DISTRIBUTION SYSTEM, circle the following criteria: 1) Site is located in area with lower water age in center region of system where higher disinfectant residual levels are maintained.
	____ ____ ____ ____	
	____ ____ ____ ____	
	____ ____ ____	
	____ ____ ____ ____	

1 Verify that site IDs match IDs in Section IV and on your distribution system schematic (See Section VII of this form). Attach additional copies if you are required to select more than 8 standard monitoring locations or need more room.

IDSE Standard Monitoring Plan

V. PEAK HISTORICAL MONTH AND PROPOSED STANDARD MONITORING SCHEDULE

A. Peak Historical Month* August

B. If Multiple Sources, Source Used to Determine Peak Historical Month
(write "N/A" if only one source in your system)

Hatt Slough Springs

C. Peak Historical Month Based On* (check all that apply)

_____ High TTHM
_____ High HAA5
__X__ Warmest water temperature

If you used other information to select your peak historical month, explain here
(attach additional sheets if needed)

_____
_____
_____

D. Proposed Standard Monitoring Schedule*

Standard Monitoring Site ID (from map) [1]	Projected Sampling Date (date or week) [2]					
	period 1	period 2	period 3	period 4		
1= Stanwood Elementary School	Week of 5/4/09	Week of 8/3/09	Week of 11/2/09	Week of 2/1/10		
2 = 263rd Place & 262nd Street	Week of 5/4/09	Week of 8/3/09	Week of 11/2/09	Week of 2/1/10		

[1] Verify that site IDs match IDs in Section IV and on your distribution system schematic (See Section VII of this form). Attach additional copies if you are required to select more than 8 standard monitoring locations.

[2] period = monitoring period. Complete for the number of periods from Section II.C. Can list exact date or week (e.g., week of 7/9/07)

IDSE Standard Monitoring Plan

VI. PLANNED STAGE 1 DBPR COMPLIANCE MONITORING SCHEDULE*

Stage 1 DBPR Monitoring Site ID (from map) [1]	Projected Sampling Date (date or week) [2]			
	Period 1	Period 2	Period 3	Period 4
3 = 30820 Old Pac Hwy	week of 8/3/2009			
TBD	week of 8/3/2009			
TBD	week of 8/3/2009			

[1] *Verify that site IDs match IDs on your distribution system schematic (See Section VII of this form). Attach additional copies if you are required to monitor at more than 8 Stage 1 DBPR sites.*

[2] *period = monitoring period. Complete for the number of periods in which you must conduct Stage 1 DBPR monitoring during IDSE monitoring. Can list exact date or week (e.g., week* of 7/9/07)

VII. DISTRIBUTION SYSTEM SCHEMATIC*

ATTACH a schematic of your distribution system.

Distribution system schematics are not confidential and should not contain information that poses a security risk to your system. EPA recommends that you use one of two options:

Option 1: Distribution system schematic with no landmarks or addresses indicated. Show locations of sources, entry points, storage facilities, standard monitoring locations, and Stage 1 compliance monitoring locations (required). Also include pressure zone boundaries and locations of pump stations. Provide map scale.

Option 2: City map without locations of pipes indicated. Show locations of sources, entry points, storage facilities, standard monitoring locations, and Stage 1 compliance monitoring locations (required). Also include boundaries of the distribution system, pressure zone boundaries and locations of pump stations. Provide map scale.

IDSE Standard Monitoring Plan

VIII. ATTACHMENTS

X	Distribution System Schematic* (Section VII).
	Additional sheets for the summary of data or site justifications (Sections III and IV).
	Additional copies of Page 3 for justification of Standard Monitoring Sites (Section IV). Required if you are a subpart H system serving more than 49,999 people or a ground water system serving more than 499,999 people.
	Additional sheets for explaining how you used data other than TTHM, HAA5, and temperature data to select your peak historical month (Section V).
	Additional copies of Page 4 for proposed monitoring schedule (Section V). Required if you are a subpart H system serving more than 49,999 people or a ground water system serving more than 499,999 people.
	Additional sheets for planned Stage 1 DBPR compliance monitoring schedule (Section VI).

Total Number of Pages in Your Plan 6

Note: Fields with an asterisk (*) are required by the Stage 2 DBPR

APPENDIX K

WELLHEAD PROTECTION PROGRAM

Wellhead Protection Program

INTRODUCTION

A wellhead protection program is a proactive and ongoing effort of a water purveyor to protect the health of its customers by preventing contamination of the groundwater it supplies for drinking water. Section 1428 of the 1986 Amendments to the Federal Safe Drinking Water Act (SDWA) mandates that each state develop a wellhead protection program. In Washington State, the Department of Health (DOH) is the lead agency for the development and administration of the State's wellhead protection program. All federally defined Group A public water systems that use groundwater as their source are required to implement a wellhead protection program. All required elements of a local wellhead protection program must be documented and included in either the Comprehensive Water System Plan (applicable to the City of Stanwood) or Small Water System Management Program document (not applicable). The State mandate for wellhead protection and the required elements of a wellhead protection program are contained in WAC 246-290-135, Source Protection, which became effective in July of 1994. The minimum required elements of a wellhead protection program for water systems in Washington State that rely on groundwater are as follows.

- A completed susceptibility assessment of each water source.
- Delineation of wellhead protection areas for each water source with the six-month, one, five and ten-year time of travel boundaries marked using DOH or Enviromental Protection Agency (EPA) guidance for delineation.
- An inventory of known and potential contaminant sources located within the defined wellhead protection areas. This inventory list shall be updated every two years.
- Documentation of the purveyor's notification to all owners/operators of known and potential sources of groundwater contamination within the defined wellhead protection areas.
- Documentation of the purveyor's notification to regulatory agencies and local governments of the defined boundaries of the wellhead protection areas and the findings of the contaminant source inventory.
- A contingency plan to ensure that customers have an adequate supply of water in the event that contamination causes a temporary or permanent loss of the system's principal source of supply.
- Documentation of the purveyor's coordination with local emergency spill responders (including police, fire and health departments), including notification of wellhead protection area boundaries, and results of the susceptibility assessment, inventory findings and contingency plan.

SUSCEPTIBILITY ASSESSMENT

In 1994, DOH developed the Susceptibility Assessment Survey Form for water purveyors to complete to determine a drinking water source's potential for contamination. The results of the susceptibility assessment may provide monitoring waivers that allow reduced source water quality monitoring.

Based on the results of the City's susceptibility assessment, DOH assigned a susceptibility rating for each source. The three susceptibility ratings are low, moderate and high. DOH assigned a moderate susceptibility rating to Bryant Well No. 1, a low susceptibility rating to Bryant Well No. 2 and a high susceptibility rating for the Hatt Slough Springs. The susceptibility rating for the recently completed Cedarhome Well is currently being assessed by DOH. The sources were granted a susceptibility waiver that allowed the City to avoid monitoring of ethylene dibromide and other soil fumigants, dioxin, endothall, diquat and glyphosphate. Sill Well did not require a susceptibility rating because it is inactive.

DELINEATION OF WELLHEAD PROTECTION AREAS

A wellhead protection area is the surface and subsurface area surrounding a well, well field, or spring through which contaminants are likely to pass and eventually be transported into the drinking water system. This is the area around the source that must be managed to protect the water supply from contamination. Establishing or delineating the boundaries of the wellhead protection area for each source is most commonly accomplished using the estimated time of travel rates of groundwater.

Wellhead Protection Area Zones

The first component of a wellhead protection area is the sanitary control area required by WAC 246-290-135. This protective area should already be tightly controlled by the purveyor to minimize direct contamination at the wellhead. The minimum sanitary control area for a well shall be a radius of 100 feet around the wellhead and 200 feet around springs. The construction, storage, disposal or application of known or potential contaminants is prohibited within this area, unless permitted by DOH and the water purveyor.

Wellhead protection areas are based on six-month, one-year, five-year, and ten-year time of travel zones. For example, a one-year time of travel zone represents an area around the well or well field in which contaminants could reach the well within one year. Each zone has different management strategies based on the urgency of response and characteristics of risks to public health posed by contaminants within the zones. An additional zone, called the buffer zone, may also be established to provide an area of added protection outside the ten-year time of travel zone for the wellhead protection area.

Delineation Methods

There are several delineation methods that can be used to define wellhead protection areas, but the simplest approach is the Calculated Fixed Radius (CFR) method. This method requires the least amount of technical data and is typically used for the initial delineation to identify immediate threats to water quality. Data input includes the annual volume pumped by the well, the open interval or length of the well screen, aquifer porosity and the desired travel time (typically six-month, one-year,

five-year, and ten-year). The Time of Travel (TOT) data calculated from the CFR method is used to create circular boundaries around each of the wells or well fields representing the hypothetical distance that a contaminant will travel for the given length of time.

The major drawback of the CFR method is that groundwater rarely behaves this simply; therefore, additional study of the aquifer in question is recommended to determine more accurate protection zones. Other more complex (and probably more accurate) delineation methods utilize analytical models, hydrogeologic mapping and computer flow models. The City's wellhead protection TOT zones were based on the CFR method and modified based on recommendations by a licensed hydrogeologist after review of geologic and hydrologic characteristics of major topographic and hydraulic characteristics identified on maps of the area. The Cedarhome, Sill, Fure and Bryant wells are all located on the East Stanwood Plateau; therefore, areas of the CFR delineations downhill from the plateau were removed from the wellhead protection areas. Hatt Slough Springs is at the crest of a different plateau, and the areas of the CFR delineations downhill from that crest were also removed from the wellhead protection plan. The wellhead protection area boundaries, based on time of travel calculations for each of the City's active and inactive water sources, are shown in **Figure 1**.

Delineation Results

The City utilized the CFR method and annual water rights quantity to update the wellhead protection area boundaries. **Table 1** presents data for each of the City's active and inactive well sources and one spring source and the results of the CFR computations. The Sill Well is included in this table for the purpose of establishing a wellhead protection area for this inactive source, should the request to transfer the remaining water rights to the Cedarhome Well be denied and the well is rehabilitated in the future. The wellhead protection area boundaries for the six-month, one-year, five-year, and ten-year time of travel computations are presented in **Figure 1**.

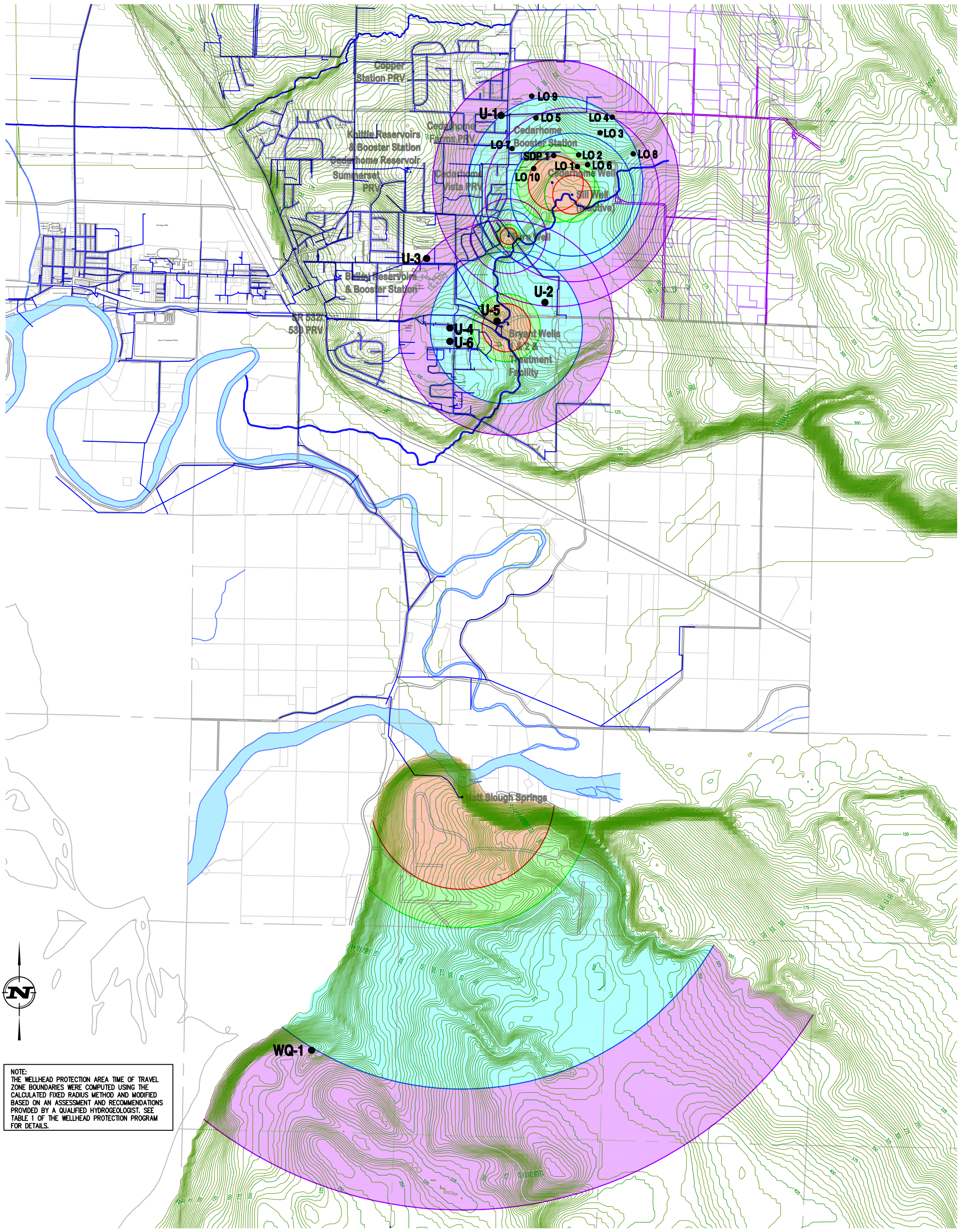

NOTE:
THE WELLHEAD PROTECTION AREA TIME OF TRAVEL ZONE BOUNDARIES WERE COMPUTED USING THE CALCULATED FIXED RADIUS METHOD AND MODIFIED BASED ON AN ASSESSMENT AND RECOMMENDATIONS PROVIDED BY A QUALIFIED HYDROGEOLOGIST. SEE TABLE 1 OF THE WELLHEAD PROTECTION PROGRAM FOR DETAILS.

LEGEND

	RIVER/STREAM
	WATER MAIN
U-5	DOE LISTED UNDERGROUND STORAGE TANK
WQ-1	DOE LISTED WASTEWATER DISCHARGE
LO 5	MAP IDENTIFIED LAND USE ACTIVITIES
SDP 1	MAP IDENTIFIED STORMWATER DETENTION POND
	6-MONTH TIME OF TRAVEL ZONE
	1-YEAR TIME OF TRAVEL ZONE
	5-YEAR TIME OF TRAVEL ZONE
	10-YEAR TIME OF TRAVEL ZONE

Figure 1
Wellhead Protection Areas

1" = 2,400

City of Stanwood

Comprehensive Water System Plan

OCT 6, 2009

J:\DATA\STA\107-088\CAD\STWCPWHP

Table 1
Well Data and Calculated Fixed Radius Values

Description	Bryant Well #1	Bryant Well #2	Cedarhome Well	Fure Well	Hatt Slough Springs	Sill Well (Inactive)
Data						
Source No.	S02	S03	S07	S04	S01	S05
Sec-Twp-Rng	S29 T32N R4E	S29 T32N R4E	S20 T32N R4E	S20 T32N R4E	S05 T31N R4E	S20 T32N R4E
Year Constructed	1948	1966	1995	1951	1934	1958
Ground Elevation (ft)	62	63	140	105	n/a	135
Well Depth (ft)	250	200	490	157	n/a	235
Pump Intake Depth (ft)	129	128	364	150	n/a	
Depth to Top of Screen or Perforations (ft)	50	168	365	145	n/a	197
Depth to Bottom of Screen or Perforations (ft)	245	200	480	150	n/a	235
Water Bearing Interval or Length of Screen (ft)	195	32	115	5	5	38
Static Water Depth (ft)	83.5	81	130	50	n/a	90
Pumping Water Depth (ft)	88.5	86	256		n/a	
2007 Pumping Rate (gpm)	565		0	0	97	0
Annual Water Right (gallons)[1]	781,567,200		315,360,000	39,420,000	591,300,000	52,560,000
Aquifer Porosity (estimated)	0.22		0.22	0.22	0.22	0.22
Calculated Fixed Radius (CFR) Values[1]						
6-Month Time of Travel (ft)	623		515	873	3,382	366
1-Year Time of Travel (ft)	880		728	1,235	4,783	517
5-Year Time of Travel (ft)	1,969		1,629	2,761	10,694	1,157
10-Year Time of Travel (ft)	2,784		2,303	3,905	15,124	1,636

1 = The City is currently coordinating with Ecology to transfer the remaining 100 gpm water right from the Sill Well to the Cedarhome Well. For the purposes of caculating the largest TOT expected, the CFR for the Cedarhome Well was calculated for 600 gpm assuming this request will be approved.

Delineation Update Requirements

DOH recommends that water systems upgrade their initial delineation using a more sophisticated groundwater flow model approach within five years following the initial delineation. In addition, wellhead protection area boundaries should be reviewed and revised when new wells are brought on-line or when there is a change in the annual volume pumped from a well. DOH recommends reevaluation of the wellhead protection area boundaries during the update of the Comprehensive Water System Plan, which occurs on a six-year schedule.

INVENTORY OF POTENTIAL CONTAMINANT SOURCES

An essential element of wellhead protection is an inventory of all potential sources of groundwater contamination throughout delineated wellhead protection areas. The purpose of the inventory is to identify past, present and proposed activities that may pose a threat to the source of water supply (i.e. the aquifer).

Inventory Approach

An inventory of potential sources of groundwater contamination was conducted in 2008 during the preparation of the City's Comprehensive Water System Plan. Several databases maintained by the Washington State Department of Ecology (Ecology) and the US EPA were searched for known and potential contaminant sources. In addition, the Washington State Department of Transportation (WSDOT) was contacted regarding past automobile accidents in which hazardous materials were being transported in the Stanwood area along State Route 532 and Pioneer Highway. State Route 532 passes through the Bryant Wells' six-month time of travel zone and Fure Well's five-year time of travel zone. Pioneer Highway is also located near the wells, but is not considered a potential contaminant source because it is downhill from the East Stanwood Plateau and the wells. Aerial images of Cedarhome Well's wellhead protection area were surveyed during its susceptibility assessment for large yards and agricultural areas that could be sources of fertilizer, yard chemicals and pet/farm animal waste pollution to groundwater.

Inventory Findings

The inventory efforts described above revealed several potential sources of contamination located within the City's wellhead protection areas. The approximate location of the sites is shown in **Figure 1** and a list of the potential sources of contamination is shown in **Table 2**. The EPA Resource Conservation Recovery Act (RCRA) website revealed no additional potential contamination sources within the wellhead TOT zones.

Other potential sources of contamination that are not specifically shown in **Figure 1** or listed in **Table 2** are discussed below.

Table 2
Potential Sources of Contamination

No.	ID	Name	Address	Material Stored/Status	WHPA Location
WQ-1	ECY/26452412	Warm Beach Chr Camp & Confer Ctr	20800 Marine Dr	Wastewater discharge permit-Individual Minor Municipal/ Active	Hatt Slough 10-year
U-1	ECY/13575917	Cedarhome General Store	6809 284th St. NW	Unknown/ Active UST	Cedarhome 5-year
U-2	ECY/43169419	Spane Buildings, Inc.	27004 64th Ave. NW	Petroleum products/ Inactive UST	Bryant 6-month
U-3	ECY/35448677	Bus Garage UST 8831	7401 272nd St. NW	Petroleum products/ Inactive UST	Bryant 5-year
U-4	ECY/42615692 RCRA/110005318646	Tesoro 62137	7306 267th Pl. NW	Petroleum products/ Active UST	Bryant 6-month
U-5	ECY/24568985	Continental Woodcraft Co.	6713 268th St. NW	Petroleum products/ Inactive UST	Bryant 6-month
U-6	ECY/63161552	Stanwood Exxon	26712 72nd Ave. NW	Petroleum products/ Active UST	Bryant 6-month
LO-1	N/A	Landowner #1	6308 Jensen Rd	Potential fertilizer, yard chemicals	Cedarhome 6-month
LO-2	N/A	Landowner #2	6220 284th St. NW	Potential fertilizer, yard chemicals	Cedarhome 1-year
LO-3	N/A	Landowner #3	6109 Jensen Rd	Potential fertilizer, yard chemicals	Cedarhome 5-year
LO-4	N/A	Landowner #4	6104 284th St. NW	Potential fertilizer, yard chemicals	Cedarhome 5-year
LO-5	N/A	Landowner #5	6608 284th St. NW	Potential fertilizer, yard chemicals	Cedarhome 5-year
LO-6	N/A	Landowner #6	6204 Jensen Rd	Potential fertilizer, yard chemicals	Cedarhome 1-year
LO-7	N/A	Landowner #7	28123 68th Ave NW	Potential fertilizer, yard chemicals	Cedarhome 1-year
LO-8	N/A	Landowner #8	28015 Jensen Rd	Potential fertilizer, chemicals	Cedarhome 5-year
LO-9	N/A	Landowner#9	28603 68th Ave NW	Potential fertilizer, yard chemicals	Cedarhome 5-year
LO-10	N/A	Cedarhome Elementary	27911 68th Ave NW	Potential fertilizer, yard chemicals	Cedarhome 6-month
SDP-1	N/A	Stormwater Detention Pond	Tax Parcel 01027800099900	-	Cedarhome 6-month

Source of Information
ECY: Washington State Department of Ecology
RCRA: Resource Conservation Recovery Act

Hazardous Spills on Highways – State Route (SR) 532 passes through the six-month time of travel zones of the Bryant Wells' wellhead protection area and the five-year TOT zone for the Fure Wells' wellhead protection area. Vehicle accidents within this section of Highway 532 could result in spills of gasoline or other transported hazardous materials that would threaten the aquifer of the Bryant and Fure Wells. Pioneer Highway is another heavily traveled highway in the Stanwood area. This highway is not considered a potential contaminant source because it is downhill from the East Stanwood Plateau; therefore, any accidents or spills on Pioneer Highway should not affect the wells. Two accidents involving fuel spills occurred between 1992 and 1996, according to WSDOT. Information from 1996 through 1998 is very limited. A new request for collision data from 1999 to 2008 (2008 data is preliminary) was made in October 2008. The new data revealed no hazardous materials spills along SR 532 between Pioneer Highway and 64th Avenue NW in that time period. Although no accidents involving hazardous materials have been reported, spills are always a concern given the wells' close proximity to SR 532.

Pesticide and Herbicide Use along Roads – Pesticides and herbicides are typically applied along County roads by the Snohomish County Public Works Department and along the State highways by the WSDOT. Although the chemicals in pesticides and herbicides are a potential source of contamination to the City's water sources, proper application will most likely avoid contaminating the groundwater.

Septic Systems – Septic systems for wastewater disposal and treatment are found in areas of the City that are not served by the City's sewage collection system. These on-site sewage disposal systems, which typically consist of a septic tank and drainfield, may pose a threat to the City's groundwater sources. The ability to remove pollutants from the discharge of these systems depends on the type of the surrounding soil. In addition, septic systems may be unlawfully used for disposal of toxic materials.

Home Oil Furnace Tanks – Some residents in the Stanwood area may be using oil furnaces to heat their homes. The number and location of these is unknown. The fuel for oil furnaces can be stored in above-grade or buried tanks. The City's groundwater sources may be threatened by heating oil that leaks out of the tanks into the underlying soil. The risk of this potential contaminant depends on the location of the leaking tanks relative to the City's wells, the amount and rate of leakage, and the type of underlying soil.

Hazardous Household Materials – Almost all households have hazardous materials that are commonly used for a variety of cleaning and maintenance purposes. Some of these materials include cleaning solvents, paints, antifreeze and engine oil. Improper use or disposal of these may result in contamination of the City's groundwater sources. All of the wells and the springs have single-family residences located within their wellhead protection areas.

Private Wells – Poorly constructed private wells with inadequate seals and improperly abandoned wells may pose a threat to the City's groundwater sources. Poorly constructed private wells with insufficient seals provide a direct pathway for contaminants from stormwater runoff, rodents, insects and other pollutants to enter the same aquifer used by the City's wells.

Stormwater – Stormwater runoff can potentially contaminate the City's groundwater sources. Runoff from industrial and commercial areas can contain high levels of metals and hydrocarbons. Runoff from residential areas is typically high in nutrients, pesticides and metals. A stormwater detention pond is located within the six-month time of travel of the Cedarhome Well, and is also within the five-year time of travel for the Sill Well (inactive).

Creeks – Creeks located within wellhead protection areas can carry contaminants that may pose a threat to the City's groundwater sources. Church Creek is a large creek that runs through the Cedarhome, Sill (inactive), Fure and Bryant Wells' six-month TOT zones. In addition, Hatt Slough Springs is located approximately 250 feet from Hatt Slough and the Stillaguamish River. Both water bodies flow through the springs' six-month TOT zone.

Lawn Care and Agricultural Practices – Farms and residences with large lawns or crops within the wellhead protection areas can be a threat to the City's groundwater sources. Inadequate cleanup of animal waste is the most likely source of potential contamination found on ranches. Fertilizer runoff is a potentially dangerous source of nitrates (exposure to nitrates and nitrites causes "Blue Baby Syndrome" in infants). There are many residences with large lawns, and numerous farms exist in and around the Stanwood area.

Inventory Update Requirements

In accordance with WAC 246-290-135, the inventory list of actual and potential groundwater contaminant sources located within the delineated wellhead protection areas must be updated every two years. Inventory updates should be scheduled such that every third update is accomplished at the same time as the reevaluation of the wellhead protection area boundaries, which is required during each six-year Comprehensive Water System Plan update.

NOTIFICATION OF INVENTORY FINDINGS

Owners and operators of known and potential sources of groundwater contamination will be notified of their location within the delineated wellhead protection areas. In addition, all water customers will be notified (via a billing insert) of the City's active water sources, its Wellhead Protection Program and the importance of protecting the City's sources. Regulatory agencies, local governments and emergency response agencies will also be notified of the location of the wellhead protection areas, contaminant source inventory findings, contingency plans and emergency response procedures. **Table 3** lists all of the notification recipients. An example of each of the four types of notification letters that will be sent is attached in **Appendix A**.

Table 3
Notification Recipients

ID	Agency or Business	Contact Person	Mailing Address	City, State Zip
Businesses and Residencies within Wellhead Protection Area				
WQ-1	Warm Beach Camp	Owner	20800 Marine Dr.	Stanwood, WA 98292
U-1	Cedarhome General Store	Owner	6809 284th St NW	Stanwood, WA 98292
U-2	Spane Buildings, Inc.	Owner	27004 64th Ave NW	Stanwood, WA 98292
U-3	Bus Garage UST 8831	Owner	7401 272nd St NW	Stanwood, WA 98292
U-4	Tesoro 62137	Owner	7306 267tn Pl NW	Stanwood, WA 98292
U-5	Continental Woodcraft Co.	Owner	6713 268th St. NW	Stanwood, WA 98292
U-6	Stanwood Exxon	Owner	26712 72nd Ave. NW	Stanwood, WA 98292
LO-1	Landowner #1	Owner	6308 Jensen Rd	Stanwood, WA 98293
LO-2	Landowner #2	Owner	6220 284th St NW	Stanwood, WA 98294
LO-3	Landowner #3	Owner	6109 Jensen Rd	Stanwood, WA 98295
LO-4	Landowner #4	Owner	6104 284th St NW	Stanwood, WA 98296
LO-5	Landowner #5	Owner	6608 284th St NW	Stanwood, WA 98297
LO-6	Landowner #6	Owner	6204 Jensen Rd	Stanwood, WA 98298
LO-7	Landowner #7	Owner	28123 68th Ave NW	Stanwood, WA 98299
LO-8	Landowner #8	Owner	28015 Jensen Rd	Stanwood, WA 98300
LO-9	Landowner #9	Owner	28603 68th Ave NW	Stanwood, WA 98301
LO-10	Cedarhome Elementary	Principal	27911 68th Ave NW	Stanwood, WA 98302
SDP-1	City Should Verify and Contact Owner			Stanwood, WA 98302
Regulatory Agencies and Local Governments				
WA State Dept. of Health, Office of Drinking Water		Northwest Regional Manager	20435 72nd Ave S, Suite 200	Kent, WA 98032-2358
WA State Dept. of Ecology, Northwest Regional Office		Director	3190 160th Ave. SE	Bellevue, WA 98008
Snohomish County Health District		Health Officer	3020 Rucker Ave.	Everett, WA 98201
Stanwood Planning Department		Planner	10220 270th St. NW	Stanwood, WA 98292
Snohomish County Planning		Director	3000 Rockefeller, M/S 604	Everett, WA 98201
WA State Department of Transportation		Northwest Regional Director	15700 Dayton Ave. N	Seattle, WA 98133
Emergency Response Agencies				
Stanwood Fire Dept.		District Fire Chief	8117 267th St NW	Stanwood, WA 98292
Stanwood Police Dept.		Police Chief	8727 271St St NW	Stanwood, WA 98292
Snohomish County Sheriff		Sheriff	3000 Rockefeller, M/S 606	Everett, WA 98201
Wa State Patrol		District 7 Captain	2700 116th St. NE	Marysville, WA 98271
City of Stanwood Water Customers				
All Water Customers		Varies	Varies	Stanwood, WA 98292

CONTINGENCY PLANNING

The City has developed an Emergency Response Plan for the water system. The Emergency Response Plan includes a contingency operation plan for the wells and other water system facilities. The contingency operation plan for the wells in the event of contamination of the water source is as follows.

Emergency Condition: Aquifer Contamination

Impact on System: Potentially major impact. If water is not suitable for potable use there is a major loss of supply. The City uses two independent aquifers for supply: 1) East Stanwood Aquifer (Cedarhome, Sill, Fure and Bryant Wells); and 2) the Stillaguamish Aquifer (Hatt Slough Springs).

Emergency Response:

1. Shut down the wells that pump water from the aquifer that is contaminated and use the other non-affected wells.
2. Notify DOH of the aquifer contamination.
3. Notify all customers of the problem and instruct them to boil all water to be used for consumption and cooking.
4. Analyze water quality of water within reservoirs and dispose of properly if contaminated.
5. Disinfect reservoirs and water mains, as necessary, to remove contaminated residuals.
6. Adjust control of system facilities, as necessary, to provide supply from storage facilities if water within them is not contaminated.
7. Monitor water quality at affected well field and investigate cause of contamination.
8. Implement water use reduction measures, as necessary, to ensure an adequate supply of water.

The City's plan to pursue long-term alternative sources of supply, including additional groundwater wells and emergency interties, will improve the City's ability to maintain uninterrupted water supply during times of source water quality emergencies.

PROGRAM IMPLEMENTATION AND RECOMMENDATIONS

The City's Wellhead Protection Program is an on-going effort that requires staffing and resources to ensure its effectiveness in protecting the source of drinking water that is supplied to the City's customers. As discussed previously in this document, the regulations require that the City perform an inventory of all potential sources of groundwater contamination throughout the delineated wellhead protection areas every two years. In addition, DOH recommends that water systems upgrade their initial delineation using a more sophisticated groundwater flow model approach within five years of the initial delineation. At a minimum, the City must reevaluate the wellhead protection area boundaries during the Comprehensive Water System Plan update process, which occurs every six years.

The City has adopted a wellhead protection ordinance that addresses permitted uses and performance standards for properties located within designated wellhead protection areas. Chapter 17.135 of the Stanwood Municipal Code addresses these specific standards and requires a critical areas report for proposed uses that are prohibited within the TOT zones.

The following tasks will be pursued as part of the City's on-going Wellhead Protection Program.

- Perform a more accurate delineation of the wellhead protection area boundaries utilizing analytical models, hydrogeologic mapping and computer flow models.
- Perform a more detailed inventory of potential sources of groundwater contamination.
- Confirm location, condition and proper closure of abandoned private wells, especially those within one-year time of travel zones.
- Distribute the required notifications as a result of updated delineations and inventory findings.
- Develop and distribute public education materials within the wellhead protection areas to address groundwater protection and household, landscape and gardening practices that could affect groundwater quality. Coordinate with and utilize existing information developed by Snohomish County.
- Establish a Wellhead Protection Committee to promote public education and awareness of the City's groundwater sources and contaminant prevention. Coordinate these efforts with the regional agencies.
- Restrict land uses in the one-year time of travel zones that pose a high risk to groundwater, such as gas stations, oil recycling, dry cleaners, fuel storage facilities, high-density animal keeping, high-density septic systems and golf courses. Coordinate these efforts with Snohomish County.
- Develop signage at the perimeter of and at strategic locations around the wellhead protection areas to inform people that they are entering an area that contains the City's drinking water source and is vulnerable to surface activities.

APPENDIX A

DATE

NAME (Emergency Response Agency)
ADDRESS
CITY, STATE ZIP

Subject: City of Stanwood Wellhead Protection Program

Dear NAME (Emergency Response Agency):

This letter is being sent to notify you (an agency that would respond in the event of a spill or contamination of the City's water supply) of the City of Stanwood Wellhead Protection Program, as required by the Washington State Department of Health (DOH). The City of Stanwood, being an owner of a Group A public water system, is required by the federal Safe Drinking Water Act to develop a Wellhead Protection Program. The goal of a Wellhead Protection Program is to protect the health of its water customers by preventing contamination of the groundwater that it supplies for drinking water. The City is working with DOH and others to update its Wellhead Protection Program.

The City's four active groundwater wells and spring source provide drinking water to more than 2,292 customer accounts within the existing water service area. The two Bryant Wells are located on the eastern city limits, just north of State Route 532. The Fure Well is located adjacent to Church Creek, also on the eastern city limit. Cedarhome Well is located just east of Cedarhome Elementary School north of the City. Sill Well, which is currently inactive, is located northeast of Fure Well along Church Creek outside the City's urban growth boundary. Hatt Slough Springs is located approximately 2 miles south of the city limits, along Hatt Slough/Stillaguamish River.

The City's initial Wellhead Protection Program efforts were accomplished in 1998 when the *Susceptibility Assessment Survey* for each well was completed. The results of the survey performed by the City and reviewed by DOH assigned a moderate susceptibility rating to Bryant Well No. 1, a low susceptibility rating to Bryant Well No. 2 and a high susceptibility rating for Fure Well and Hatt Slough Springs. The susceptibility rating for the recently completed Cedarhome Well is currently being assessed by DOH.

The next step in the development of the City's Wellhead Protection Program was the update of the delineated wellhead protection areas for each well. A wellhead protection area is the surface and subsurface area surrounding a well, well field, or spring through which contaminants are likely to pass and eventually be transported into the drinking water system. This is the area around the source that must be managed to protect the water supply from contamination. The wellhead protection areas are subdivided into 6-month 1-year, 5-year, and 10-year time of travel zones. The time of travel refers to the estimated amount of time it will take for water (and contaminants) in that zone to reach the supply source. For example, a 1-year time of travel zone represents an area around the well or well field in which contaminants could reach the well within one year. The delineation of time of travel zones is important because the City then knows how much time it could take a contaminant in a certain area to reach the drinking water supply source.

The time of travel zones for each water source have been defined according to the "Calculated Fixed Radius" (CFR) method developed by DOH, and modified based on recommendations by a licensed hydrogeologist. The results of the wellhead protection area delineations are shown in the attached **Figure 1**. Please note that the wellhead protection area boundaries shown in the figure are subject to change in the future based on further hydrogeologic study.

Upon the updated delineation of the wellhead protection areas, an update to the inventory of known and potential contaminant sources located within the defined wellhead protection areas was accomplished. The inventory efforts revealed several potential sources of contamination located within a broad area around the City's wells, as shown in **Figure 1**. However, 22 were located within the wellhead protection areas. The potential contamination sources were found using the Washington State Department of Ecology (Ecology) Underground Storage Tank lists and the Environmental Protection Agency (EPA) Resource Conservation and Recovery Act (RCRA) facilities register. In addition, during the Susceptibility Assessment of the new Cedarhome Well, multiple area landowners were identified as potential contamination sources for fertilizer and yard chemicals. Facilities with water quality discharge permits were also included in the inventory. One stormwater detention pond was identified in the Cedarhome Well 6-month time-of-travel zone. See **Table 1**, attached, for the inventory of potential sources of contamination.

The activities at your business have the potential to affect the water quality of the City's drinking water source because of your location within the City's wellhead protection area. The inventory findings have been provided to local regulatory agencies and emergency response agencies to make them aware of your business's location within the City's wellhead protection area, as required by DOH.

An Emergency Response Plan has been developed for the City's water system. The Emergency Response Plan includes a contingency operation plan for the wells and other water system facilities. In summary, the contingency operation plan for the wells in the event of contamination of the water source is to shut down the affected well(s), notify regulatory agencies and customers, and adjust control of other facilities to minimize supply interruption, as required.

If you have any questions or concerns regarding the City's Wellhead Protection Program, please contact me at (360) 629-5323.

Sincerely,

Andrew Bullington

Public Works Director
City of Stanwood

Attachment: Figure 1 – Wellhead Protection Areas
Table 1 – Potential Sources of Contamination

DATE

Subject: City of Stanwood Wellhead Protection Program

Dear Water Customer:

The City of Stanwood, being an owner of a Group A public water system, is required by the federal Safe Drinking Water Act to develop a Wellhead Protection Program. The goal of a Wellhead Protection Program is to protect the health of its water customers by preventing contamination of the groundwater that it supplies for drinking water. The City is working with the Washington State Department of Health (DOH) and others to update its Wellhead Protection Program. As part of the program, the City is notifying residents and business owners of their efforts to prevent groundwater contamination.

The City's four active groundwater wells and spring source provide drinking water to more than 2,292 customer accounts within the existing water service area. The two Bryant Wells are located on the eastern city limits, just north of State Route 532. The Fure Well is located adjacent to Church Creek, also on the eastern city limit. Cedarhome Well is located just east of Cedarhome Elementary School north of the City. Sill Well, which is currently inactive, is located northeast of Fure Well along Church Creek outside the City's urban growth boundary. Hatt Slough Springs is located approximately 2 miles south of the city limits, along Hatt Slough/Stillaguamish River. The City performed a susceptibility survey for each well field to determine their potential for contamination. As a result, DOH assigned a moderate susceptibility rating to Bryant Well No. 1, a low susceptibility rating to Bryant Well No. 2 and a high susceptibility rating for Fure Well and Hatt Slough Springs. The susceptibility rating for the recently completed Cedarhome Well is currently being assessed by DOH.

Protection of the City's drinking water sources is everyone's responsibility. Contamination of a source may require the City to pursue water from other sources, which would most likely result in water rate increases to all customers. The City is working with businesses and landowners in the wellhead protection areas to ensure that contamination does not occur. You, as a resident in the City's water service area, can also help by being careful of your own practices around your home. For example, when applying fertilizers or pesticides to your lawn and landscape areas, always use the correct dosage identified in the instructions. Minimize the use of chemical weed control products. In addition, dispose of old or unused hazardous waste appropriately. There are many household waste disposal programs available free of charge. When hazardous products such as oil, antifreeze, paint, chemicals, or pesticides are disposed of onto the ground or into septic tanks, they can end up in the groundwater that we drink.

The main goal of the City's Wellhead Protection Program is to protect the health of its customers by being proactive in preventing contamination of the groundwater that it supplies for drinking water. We urge you to also take a proactive approach to protect the water that you drink. You may contact me at (360) 629-5323 with questions about the City's Wellhead Protection Program or efforts around the house to protect our groundwater sources.

Sincerely,

Andrew Bullington

Public Works Director
City of Stanwood

DATE

NAME (Business Owner)
ADDRESS
CITY, STATE ZIP

Subject: City of Stanwood Wellhead Protection Program

Dear NAME (Business Owner):

This letter is being sent to notify you of the City of Stanwood Wellhead Protection Program and your location within the wellhead protection area, as required by the Washington State Department of Health (DOH). The City of Stanwood, being an owner of a Group A public water system, is required by the federal Safe Drinking Water Act to maintain a Wellhead Protection Program. The goal of a Wellhead Protection Program is to protect the health of its water customers by preventing contamination of the groundwater that it supplies for drinking water. The City is working with DOH and others to update its Wellhead Protection Program.

The City's four active groundwater wells and spring source provide drinking water to more than 2,292 customer accounts within the existing water service area. The two Bryant Wells are located on the eastern city limits, just north of State Route 532. The Fure Well is located adjacent to Church Creek, also on the eastern city limit. Cedarhome Well is located just east of Cedarhome Elementary School north of the City. Sill Well, which is currently inactive, is located northeast of Fure Well along Church Creek outside the City's urban growth boundary. Hatt Slough Springs is located approximately 2 miles south of the city limits, along Hatt Slough/Stillaguamish River.

The City's initial Wellhead Protection Program efforts were accomplished in 1998 when the *Susceptibility Assessment Survey* for each well was completed. The results of the survey performed by the City and reviewed by DOH assigned a moderate susceptibility rating to Bryant Well No. 1, a low susceptibility rating to Bryant Well No. 2 and a high susceptibility rating for Fure Well and Hatt Slough Springs. The susceptibility rating for the recently completed Cedarhome Well is currently being assessed by DOH.

The next step in the development of the City's Wellhead Protection Program was the update of the delineated wellhead protection areas for each well. A wellhead protection area is the surface and subsurface area surrounding a well, well field, or spring through which contaminants are likely to pass and eventually be transported into the drinking water system. This is the area around the source that must be managed to protect the water supply from contamination. The wellhead protection areas are subdivided into 6-month 1-year, 5-year, and 10-year time of travel zones. The time of travel refers to the estimated amount of time it will take for water (and contaminants) in that zone to reach the supply source. For example, a 1-year time of travel zone represents an area around the well or well field in which contaminants could reach the well within one year. The delineation of time of travel zones is important because the City then knows how much time it could take a contaminant in a certain area to reach the drinking water supply source.

The time of travel zones for each water source have been defined according to the "Calculated Fixed Radius" (CFR) method developed by DOH, and modified based on recommendations by a licensed hydrogeologist. The results of the wellhead protection area delineations are shown in the attached **Figure 1**. Please note that the wellhead protection area boundaries shown in the figure are subject to change in the future based on further hydrogeologic study.

Upon the updated delineation of the wellhead protection areas, an update to the inventory of known and potential contaminant sources located within the defined wellhead protection areas was accomplished. The inventory efforts revealed several potential sources of contamination located within a broad area around the City's wells, as shown in **Figure 1**. However, 22 were located within the wellhead protection areas. The potential contamination sources were found using the Washington State Department of Ecology (Ecology) Underground Storage Tank lists and the Environmental Protection Agency (EPA) Resource Conservation and Recovery Act (RCRA) facilities register. In addition, during the Susceptibility Assessment of the new Cedarhome Well, multiple area landowners were identified as potential contamination sources for fertilizer and yard chemicals. Facilities with water quality discharge permits were also included in the inventory. One stormwater detention pond was identified in the Cedarhome Well 6-month time-of-travel zone. See **Table 1**, attached, for the inventory of potential sources of contamination.

The activities at your business have the potential to affect the water quality of the City's drinking water source because of your location within the City's wellhead protection area. The inventory findings have been provided to local regulatory agencies and emergency response agencies to make them aware of your business's location within the City's wellhead protection area, as required by DOH.

The purpose of this letter is to inform you of the City's Wellhead Protection Program and your location within the wellhead protection areas. No action is required by you at this time. We hope that your increased awareness of the City's wellhead protection area will make you especially cautious in regard to protecting the drinking water of the City's customers. If you have any questions or concerns regarding protection of the City's groundwater sources, please contact me at (360) 629-5323.

Sincerely,

Andrew Bullington

Public Works Director
City of Stanwood

Attachment: Figure 1 – Wellhead Protection Areas
Table 1 – Potential Sources of Contamination

DATE

NAME (Regulatory Agency)
ADDRESS
CITY, STATE ZIP

Subject: City of Stanwood Wellhead Protection Program

Dear NAME (Regulatory Agency):

This letter is being sent to notify you (an agency that would respond in the event of a spill or contamination of the City's water supply) of the City of Stanwood Wellhead Protection Program, as required by the Washington State Department of Health (DOH). The City of Stanwood, being an owner of a Group A public water system, is required by the federal Safe Drinking Water Act to develop a Wellhead Protection Program. The goal of a Wellhead Protection Program is to protect the health of its water customers by preventing contamination of the groundwater that it supplies for drinking water. The City is working with DOH and others to update its Wellhead Protection Program.

The City's four active groundwater wells and spring source provide drinking water to more than 2,292 customer accounts within the existing water service area. The two Bryant Wells are located on the eastern city limits, just north of State Route 532. The Fure Well is located adjacent to Church Creek, also on the eastern city limit. Cedarhome Well is located just east of Cedarhome Elementary School north of the City. Sill Well, which is currently inactive, is located northeast of Fure Well along Church Creek outside the City's urban growth boundary. Hatt Slough Springs is located approximately 2 miles south of the city limits, along Hatt Slough/Stillaguamish River.

The City's initial Wellhead Protection Program efforts were accomplished in 1998 when the *Susceptibility Assessment Survey* for each well was completed. The results of the survey performed by the City and reviewed by DOH assigned a moderate susceptibility rating to Bryant Well No. 1, a low susceptibility rating to Bryant Well No. 2 and a high susceptibility rating for Fure Well and Hatt Slough Springs. The susceptibility rating for the recently completed Cedarhome Well is currently being assessed by DOH.

The next step in the development of the City's Wellhead Protection Program was the update of the delineated wellhead protection areas for each well. A wellhead protection area is the surface and subsurface area surrounding a well, well field, or spring through which contaminants are likely to pass and eventually be transported into the drinking water system. This is the area around the source that must be managed to protect the water supply from contamination. The wellhead protection areas are subdivided into 6-month 1-year, 5-year, and 10-year time of travel zones. The time of travel refers to the estimated amount of time it will take for water (and contaminants) in that zone to reach the supply source. For example, a 1-year time of travel zone represents an area around the well or well field in which contaminants could reach the well within one year. The delineation of time of travel zones is important because the City then knows how much time it could take a contaminant in a certain area to reach the drinking water supply source.

The time of travel zones for each water source have been defined according to the "Calculated Fixed Radius" (CFR) method developed by DOH, and modified based on recommendations by a licensed hydrogeologist. The results of the wellhead protection area delineations are shown in the attached **Figure 1**. Please note that the wellhead protection area boundaries shown in the figure are subject to change in the future based on further hydrogeologic study.

Upon the updated delineation of the wellhead protection areas, an update to the inventory of known and potential contaminant sources located within the defined wellhead protection areas was accomplished. The inventory efforts revealed several potential sources of contamination located within a broad area around the City's wells, as shown in **Figure 1**. However, 22 were located within the wellhead protection areas. The potential contamination sources were found using the Washington State Department of Ecology (Ecology) Underground Storage Tank lists and the Environmental Protection Agency (EPA) Resource Conservation and Recovery Act (RCRA) facilities register. In addition, during the Susceptibility Assessment of the new Cedarhome Well, multiple area landowners were identified as potential contamination sources for fertilizer and yard chemicals. Facilities with water quality discharge permits were also included in the inventory. One stormwater detention pond was identified in the Cedarhome Well 6-month time-of-travel zone. See **Table 1**, attached, for the inventory of potential sources of contamination.

The activities at your business have the potential to affect the water quality of the City's drinking water source because of your location within the City's wellhead protection area. The inventory findings have been provided to local regulatory agencies and emergency response agencies to make them aware of your business's location within the City's wellhead protection area, as required by DOH.

An Emergency Response Plan has been developed for the water system. The Emergency Response Plan includes a contingency operation plan for the wells and other water system facilities. In summary, the contingency operation plan for the wells in the event of contamination of the water source is to shut down the affected well(s), notify regulatory agencies and customers, and adjust control of other facilities to minimize supply interruption, as required.

If you have any questions or concerns regarding the City's Wellhead Protection Program, please contact me at (360) 629-5323.

Sincerely,

Andrew Bullington

Public Works Director
City of Stanwood

Attachment: Figure 1 – Wellhead Protection Areas
Table 1 – Potential Sources of Contamination

APPENDIX L

CONSUMER CONFIDENCE REPORT

Mayor
Dianne White

Mayor Pro Tem
Arne Wennerberg

City Council
Shelley Klasse
Conrad Ryer
Andy Chappel
Bill Carlton
Tim Loney
Leonard Kelley

City Administrator
Joyce Papke

Public Works Director
Andy Bullington

Public Utilities Superintendent
Kevin Hushagen

Public Water System ID #83650

City of Stanwood
Water Quality Report
For the Year 2008

Continuing our Commitment

Once again we are pleased to present our annual Water Quality Report for the 2008 calendar year. We are committed to delivering quality drinking water. This report will inform you on the source of your water, what compounds are currently in your water, and how well your water complies with current regulations enforced by the Environmental Protection Agency (EPA) and Washington State Department of Health (DOH).

Stanwood Drinking Water Sources

The City currently has six groundwater sources that withdraw water from two aquifers. Aquifers are natural reservoirs of water found underground within layers of gravel, rock and sand. This water becomes replenished as rainwater seeps through layers of earth, which acts as a natural filter. Fure Well, Hatt Slough Springs, Cedarhome Well and both Bryant Wells are supplied by aquifers. The Bryant Wells are the City's primary source of water and provide the majority of the City's water supply. The Bryant Wells are located near Stanwood High School off 268th Street NW (Stanwood-Bryant Road). The Cedarhome Well was completed in spring 2008 and is located behind Cedarhome Elementary School. The City meters all water produced by the sources, as well as all water service connections to the system.

Cross Connection Control — Protect Your Drinking Water from Contamination

Water normally flows in one direction, from the public water system through the customer's cold or hot water plumbing to a sink tap or other plumbing fixture. The plumbing fixture is the end of the potable water system and the start of the waste disposal system. Under certain conditions, water can flow in the reverse direction either though the creation of an unexpected vacuum condition in the water system or a backpressure condition caused by irregular pumping on the customers side of the system.

How to Prevent Contamination of Your Drinking Water

Don't

- Submerge hoses in buckets, pools, tubs, sinks, ponds, etc.
- Use spray attachments without a backflow prevention device.
- Connect waste pipes from water softeners or other treatment systems to the sewer or other submerged drain pipes.
- Use a hose to unplug blocked toilets, sewers, etc.

Do

- Keep the ends of hoses clear of all possible contaminants.
- If not already installed, buy and install hose bib type vacuum breakers on all threaded faucets around your home.
- Install an approved backflow prevention assembly on all underground lawn irrigation systems.

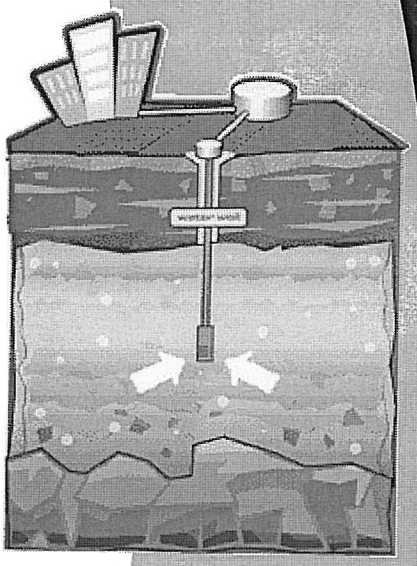

GET INVOLVED!

City Council meetings are held on the **2nd and 4th Thursdays (starting at 7 pm) of each month at the School District Office located at 26920 Pioneer Highway.** Please join us to express your thoughts and get involved. If you have any questions regarding this report or your water utility, feel free to contact the **Public Works Department at 360-629-9781** Monday through Friday between 8:00 a.m. and 4:30 p.m.

Your Water

We are lucky enough to have outstanding natural sources of water that have not required treatment in the past. At the City of Stanwood, we work 24 hours a day, 7 days a week to provide quality water to all of our customers. We routinely monitor the quality of all of our water sources and the distribution system to ensure that they meet all current regulations. The **2008 Water Quality Monitoring Results Table** shown below summarizes the makeup of your water in the past year. Other contaminants (such as lead and copper), which are not listed, were not detected.

2008 Water Quality Monitoring Results

This is What is in Your Tap Water			This Much is Allowed		Where Did this Compound Come From?
Detected Contaminants	**Result**	**Units**	**EPA's MCL Standard**	**Comply?**	**Typical Sources**
Arsenic	Average: 9.6 Range: 2—14	ppb	10	**Yes**	Erosion from natural deposits
Nitrate	1.1	ppm	10	**Yes**	Runoff from fertilizer use, animal waste, natural erosion
Total Coliform	Not detected in 69 annual samples	Number of positive monthly samples	0	**Yes**	Microbes naturally present in the environment
Fecal Coliform and E. Coli	Not detected in 69 annual samples	Number of positive monthly samples	0	**Yes**	Bacterial contamination from human or animal waste

DEFINITIONS

MCL = Maximum Contaminant Level: The highest level of a contaminant that is allowed in drinking water. MCLs are set as close to the MCLGs as feasible using the best available treatment technology.

MCLG = Maximum Contaminant Level Goal: The level of a contaminant in drinking water below which there is no known or expected risk to health. MCLGs allow for a margin of safety.

TT = Treatment Technique: A required process intended to reduce the level of a contaminant in drinking water.

ppb = parts per billion = micrograms per liter (µg/L). This can be compared to one cent in $10 million.

ppm = parts per million = milligrams per liter (mg/L). This can be compared to one cent in $10,000.

NTU = Nephelometric Turbidity Units: Turbidity is a measure of the cloudiness of the water.

About our Disinfection Byproducts Violation

We are required to monitor your drinking water for specific contaminants on a regular basis. Results of regular monitoring are an indicator of whether or not your drinking water meets health standards. During the months from July through October in 2007 and 2008 we did not monitor or test for disinfection byproducts, and therefore cannot be sure of the quality of your drinking water during that time. As a result, we received a notice of violation from the State Department of Health on June 2, 2009. Since that time we have implemented an approved sampling schedule. Samples were recently collected in May of 2009 and all of the laboratory results were in compliance with State standards.

May 2009 Disinfection Byproducts Results				
Detected Contaminants	**Result**	**Units**	**MCL**	**Comply?**
Total Trihalomethanes	8.7	ppb	80	**Yes**
Haloacetic Acids Five	1.8	ppb	60	**Yes**

We have it on our schedule to resample for disinfection byproducts this summer to ensure that your water is of utmost quality. For more information about disinfection byproducts please contact Kevin Hushagen, Utilities Superintendent at (360) 629-9782 or Andy Bullington, Public Works Director at (360) 629-5323, located at 26729 98th NW or visit the State Department of Health's website at http://www.doh.wa.gov/ehp/dw/Publications/disinfection_byproducts.htm.

Please share this information with all the other people who drink this water, especially those who may not have received this notice directly (for example, people in apartments, nursing homes, schools and businesses). You can do this by posting this notice in a public place or distributing copies by hand or mail.

Help Conserve Water: Water Use Efficiency Performance Report

We would like to thank you for doing your part in helping our community conserve water. Through our commitment to water conservation, we have reduced our residential water use by more than one-third over the past 10 years. In just the last year, we saved 20 million gallons of water and helped to promote environmental sustainability within the City.

City of Stanwood
Comparison of 1998 and 2008 Water Use Data

	Year		Percent Change
	1998	2008	
Total Water Production	338 MG	345 MG	2%
Total Authorized Consumption	271 MG	312 MG	15%
Distribution System Leakage	19.7%	9.6%	-51.5%
Average Single Family Use per Household	301 gpd	193 gpd	-36%

MG = million gallons gpd = gallons per day

The City of Stanwood's goal is to reduce single family household water use to 210 gallons per day (gpd) by 2017 based on a 3-year rolling average. A 3-year rolling average is used to asses our conservation performance because weather can have a large impact on water use year to year. Our 3-year rolling average water use was 215 gpd per household and our 2008 average water use was 193 gpd per household.

Here are some ways you can help us reach our water use goals by saving even more water around your house.

- Fix leaks in your toilets, faucets and sprinklers.
- Replace your showerheads with low-flow models.
- Wash only full loads of clothes and dishes.
- Install aerators on your bath and kitchen faucets.
- Replace dishwashers and washing machines with Energy Star® models.
- Select drought-tolerant or native plants for your next landscaping project.
- Water your lawn once or twice a week for a longer duration (45 – 60 minutes or 1 inch of water) to encourage deep roots.

Our Public Works Department is also working hard to reduce the amount of water loss or distribution system leakage. They are fixing leaks in the system, replacing old water main and expanding our metering of un-billable uses like our flushing program to meet our goal of achieving less than 10 percent distribution system leakage by 2018, based on a 3-year rolling average. We are happy to report that our distribution system leakage was less than 10 percent in 2008 and we are well on our way to meeting our water use efficiency goals.

Information from the Environmental Protection Agency (EPA)

Some people may be more vulnerable to contaminants in drinking water than the general population. Immuno-compromised persons, such as persons with cancer undergoing chemotherapy, persons who have undergone organ transplants, people with HIV/AIDS or other immune system disorders, some elderly and infants, can be particularly at risk from infections. These people should seek advice about drinking water from their health care providers. EPA/CDC guidelines on appropriate means to lessen the risk of infection by *Cryptosporidium* and other microbial contaminants are available from the Safe Drinking Water Hotline (800-426-4791).

January - May 2009 Arsenic Results

Contaminant	Result	Units	MCL	Comply?
Arsenic	8.64	ppb	10	Yes

In drinking water supplies, the potential contaminants and their sources include:

- *Microbial Contaminants*, such as viruses and bacteria, from wildlife;
- *Inorganic Contaminants*, such as salts and metals which are naturally occurring;
- *Organic Contaminants*, which are byproducts of disinfection processes; and
- *Radioactive Contaminants*, which can by naturally occurring.

To ensure that tap water is safe to drink the EPA adopts regulations setting water quality standards for public water systems. The Federal Food and Drug Administration regulates contaminants in bottled water and is responsible for providing the same level of public health protection.

Drinking water, including bottled water, may reasonably be expected to contain at least small amounts of some contaminants. The presence of contaminants does not necessarily indicate that water poses a health risk. More information about contaminants and potential health effects can be obtained by calling the Environmental Protection Agency's Safe Drinking Water Hotline (800-426-4791).

Arsenic is one compound that is naturally present in our water source, but is removed with the new Bryant Well Field Treatment Facility. While your drinking water meets EPA's standard for arsenic, it does contain low levels of arsenic. The EPA's standard balances the current understanding of arsenic's possible health effects against the cost of removing arsenic from drinking water. The EPA continues to research the health effects of low levels of arsenic, which is a mineral known to cause cancer in humans at high concentrations and is linked to other health effects such as skin damage and circulatory problems.

City of Stanwood
10220 270th Street NW
Stanwood, WA 98292

PRESORT
STANDARD
U.S. POSTAGE
PAID
PERMIT NO. 44

POSTAL PATRON
STANWOOD, WA 98292

The Bryant Well Field Treatment Facility

Construction of the new Bryant Well Field Treatment Facility has been completed as of November 2008. This facility treats our primary water source and results in safer water by reducing arsenic, manganese and hydrogen sulfide contaminants. You might have noticed the odor and taste of chlorine in your water. This is to ensure that your water is continuously disinfected and always safe to drink.

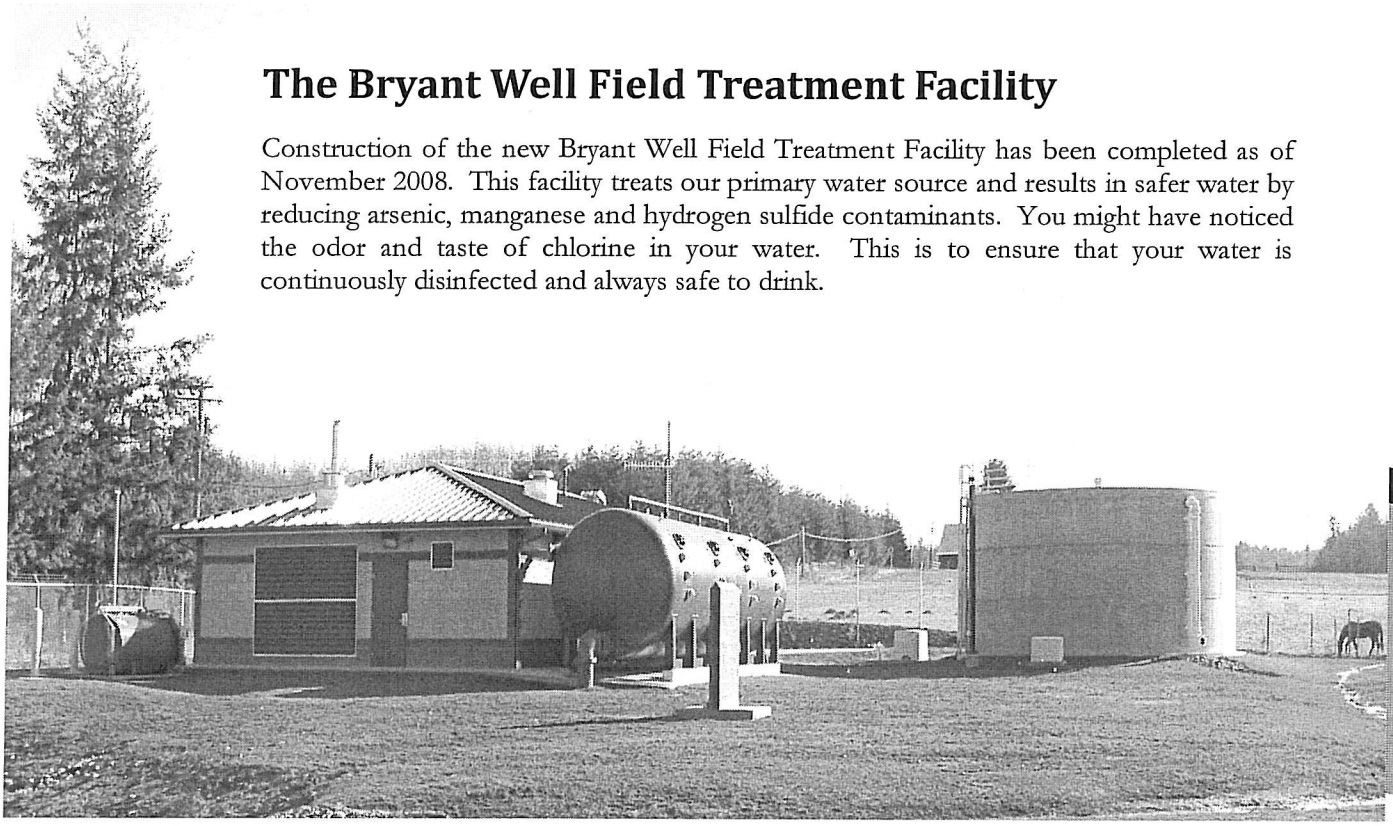

APPENDIX M

HYDRAULIC MODEL NODE DIAGRAM

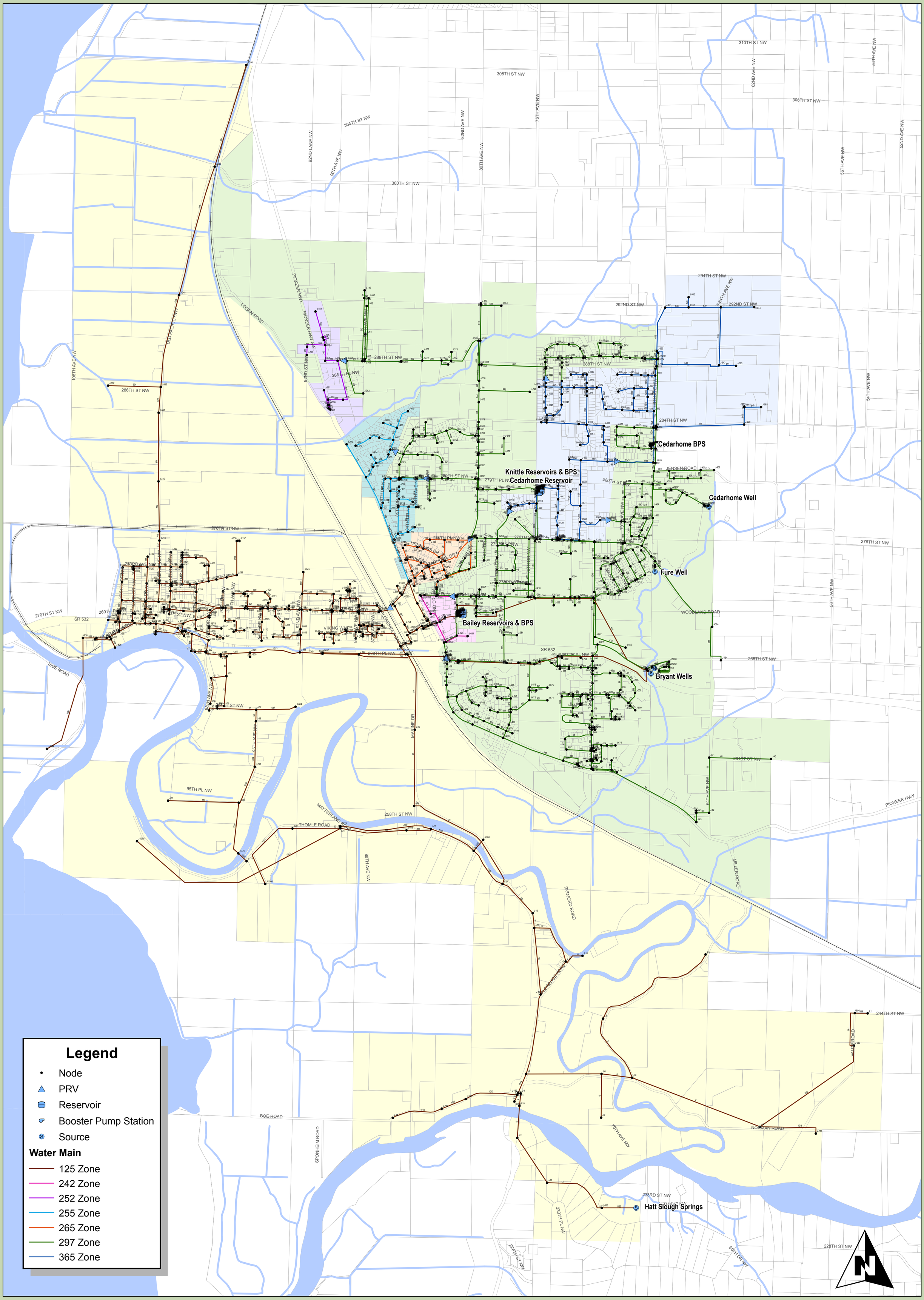

CITY OF STANWOOD
COMPREHENSIVE WATER SYSTEM PLAN

HYDRAULIC MODEL NODE DIAGRAM

1 in = 1,000 ft

0 1,000 2,000

DRAWING IS NOT TO SCALE
IF BAR IS NOT 2" LONG

J:\data\STA\107-088\GIS\MAPS\STA-WSP-NODE.mxd DATE REVISED: OCT 2, 2009 BY: MRC

APPENDIX N

WATER ORDINANCES

Title 12

UTILITIES

Chapters:

12.04 Sewer Rates and Charges
12.08 *Reserved*
12.12 Drainage Utility Fees and Fund
12.16 Water Utility Rates and Charges
12.18 Water Utility Regulations
12.20 Utility Billing Regulations
12.30 Right-of-Way Use Permits
12.40 Plant Investment Charge
12.45 Extension of City Services Outside City Limits
12.50 Latecomer Agreements for Water and Sewer

Chapter 12.04

SEWER RATES AND CHARGES

Sections:

12.04.020 Sewer rates.
12.04.030 Connection fees, charges and costs.

12.04.020 Sewer rates.

For the furnishing of service to the users and potential users of the city sanitary sewage system, the rates and charges per month are established for the classifications indicated below:

(1) Definitions.

(a) "Base monthly charge" means the minimum charge to a user per month. For those users whose sewer charge is calculated based on water use, the base monthly charge includes water use up to the base monthly allowance.

(b) "Units" means the number of dwelling units in a multifamily residence such as a duplex, apartment or condominium; or the number of separate rooms or living units in a nursing home, congregate care or assisted living facility; each having separate bathroom and/or kitchen facilities.

(c) "Incremental rate" means the dollar amount charged per 100 cubic feet of water use above the base monthly allowance and applies to those users whose sewer fee is calculated based on water use.

(d) "Sewer charge" means the dollar amount a user is charged for sewer service, calculated based on the sewer rates.

(e) "Sewer rate" means the dollar amount a user is charged for sewer service per unit of measure. For example, a sewer rate may be in terms of dollars per 100 cubic feet of water used, dollars per student, or other units.

(f) "Customer" means the legal property owner at time of meter reading.

(g) "Account" means customer.

(h) "Low-income household" means a household in which the total annual income is below the very low-income level for the Seattle/Everett area as established and amended by survey from time to time by the United States Department of Housing and Urban Development.

(i) "Senior citizen" means a person of 62 years of age or older.

(j) "Disabled person" means a person with a physical or mental impairment that substantially limits one or more major life activities, such as walking, seeing, hearing, speaking, learning, performing manual tasks, caring for oneself, etc.

(2) Rates and Charges.

(a) Basis of Rates and Charges. Sewer charges shall be based on the monthly water use as recorded by the city water meters unless indicated otherwise in this section. The charge for residential uses for the summer months, defined herein as June, July, August and September for accounts in utility meter books 01, 02, 06, 07 and 09, and July, August, September and October for accounts in utility meter books 03, 04, 05 and 08, shall be based on the lesser of the water use for the billing period or the average monthly water use for the preceding October through May, or November through June, period, respectively. If data for the full October through May, or November through June, period are not available, the data will be averaged over the period for which data are available. For new accounts that begin in the defined summer months, the month's charge shall be based on the water use for that month. The charge for nonresidential uses for the months of June, July, August and September shall be based on the water use for that month unless indicated otherwise in this section. A user may elect, at his/her own expense, to install a separate water meter to measure water used for irrigation. An irrigation-only account will then be established and billed separately by the city.

(b) Rate Schedule. Effective January 1, 2005.

Classification	Base Monthly Charge	Incremental Rate
Residential:		
Single-family residences	$34.05	$3.00/100 cubic feet
Multifamily residences	$34.05 times the number of units	$3.00/100 cubic feet
Commercial:		
Light commercial	$39.10	$3.00/100 cubic feet
Heavy commercial	$74.30	$3.20/100 cubic feet

Classification	Base Monthly Charge	Incremental Rate
General industrial	$124.10	$4.09/100 cubic feet
Schools:		
Without kitchen and/or gym	$39.10 plus $1.35 per student and staff	Not applicable
With kitchen and/or gym facilities	$80.86 plus $1.35 per student and staff	Not applicable
Other:		
Hotels and guest houses	$34.05 times the number of units	$3.00/100 cubic feet
Churches, meeting halls, etc.	$39.10	$3.00/100 cubic feet
All Other Uses (e.g., government, utilities, etc.)	$39.10	$3.00/100 cubic feet

(c) Rate Schedule. Effective January 1, 2009.

Classification	Base Monthly Charge	Incremental Rate
Residential:		
Single-family residences	$35.07	$3.09/100 cubic feet
Multifamily residences	$35.07 times the number of units	$3.09/100 cubic feet
Commercial:		
Light commercial	$40.27	$3.09/100 cubic feet
Heavy commercial	$76.22	$3.30/100 cubic feet
General industrial	$127.72	$4.21/100 cubic feet
Schools:		
Without kitchen and/or gym facilities	$40.27 plus $1.39 per student and staff	Not applicable
With kitchen and/or gym facilities	$83.29 plus $1.39 per student and staff	Not applicable
Other:		
Hotels and guest houses	$35.07 times the number of units	$3.09/100 cubic feet
Churches, meeting halls, etc.	$40.27	$3.09/100 cubic feet
All Other Uses (e.g., government, utilities, etc.)	$40.27	$3.09/100 cubic feet

(d) Additional Information. The school population to be applied for calculation of the sewer charge shall be the number of full-time staff and student equivalents as reported by the school district for the month of October of each year. This population shall be used for the school year beginning November 1st and for the school year until new October data are available. Schools shall be charged only the base monthly charge for the months of June, July and August as long as the facility remains unoccupied and the water consumption reflects an inactive status.

(e) Sewer Service Outside the City Limits. Rates for services outside of the city limits of Stanwood shall be city rates as adopted, plus 45 percent.

(3) Base Monthly Allowances.

(a) The base monthly allowance shall be as follows:

Classification	Base Monthly Allowance
Residential:	
Single-family residences	600 cubic feet per month
Multifamily residences:	
Units individually metered	600 cubic feet per month
One water meter for all units	600 cubic feet per month times the number of units
Commercial:	
Light commercial	600 cubic feet per month
Heavy commercial	600 cubic feet per month
General industrial	600 cubic feet per month
Schools:	Not applicable
Other:	
Hotels and guest houses	600 cubic feet per month times the number of units
Churches, meeting halls, etc.	600 cubic feet per month
All Other Uses (e.g., government, utilities, etc.)	600 cubic feet per month

(b) The following conditions apply to the base monthly allowances:

(i) Multifamily Residences. No modifications given for unoccupied units when multiple units are on a single meter.

(4) Classification Descriptions.

(a) Single-Family Residences. This classification includes buildings for residential uses and includes detached homes intended for use by single families.

(b) Multifamily Residences. This classification includes structures containing more than one residence and includes uses such as duplexes, triplexes, multiplexes, nursing homes, congregate care, convalescent care, assisted living facilities, condominiums and apartments.

(c) Light Commercial. This classification includes commercial uses not otherwise classified. It incorporates simple domestic waste generators such as offices and small retail trade establishments.

(d) Heavy Commercial. This classification includes commercial uses that have higher potential for problem wastes (high strength, problem constituents or large volume) than the light commercial classification. The heavy commercial classification includes laundries, dry cleaners, restaurants, cafes, grocery stores, medical clinics, funeral homes, photo development, veterinary clinics, dental clinics, etc.

(e) General Industrial. This classification includes uses that generate large volumes of wastewater or have high strength or problem wastewater. This classification includes manufacturing and processing facilities, etc.

(f) Hotels and Guest Houses. This classification includes buildings used for sleeping purposes by guests (transient lodging) such as motels, inns, hotels, and bed and breakfast inns. No modifications will be given for unoccupied units.

(g) Public/Institution. This classification includes government buildings, churches, meeting halls, school district administration offices unless they are situated within a school building, etc.

(h) Schools. This classification includes education facilities. If school district administration offices are located within the same building as where education classes are conducted, such administration staff shall be counted as school staff for the sewage charge calculation.

(i) Special. This classification is reserved for special cases that do not fit the other classes. The public works director shall determine whether a special classification and charge will apply and will recommend to city council such charges.

(5) Users with State Waste Discharge Permits, NPDES Permits or Pretreatment Agreements with the City. This classification includes businesses with a state waste discharge permit, NPDES permit or pretreatment agreement with the city. The monthly charge shall be based on the maximum amount of wastewater allowed by the permit or agreement unless a city-approved meter indicates a smaller amount was actually sent to the city's wastewater facilities. For businesses that do not yet have a permit or agreement, calculation of their charge shall be based on the most appropriate classification above.

(6) Users with High Strength Waste. The city shall have the right to charge an additional monthly sewer service charge for a high strength waste, which is defined herein as one with pollutant concentrations in excess of typical domestic wastewater. A surcharge is appropriate for waste strength conditions including, but not limited to, a total five-day biochemical oxygen demand and/or suspended solids concentration in excess of 300 milligrams per liter. The public works director will recommend to city council an appropriate monthly surcharge.

(7) Users with Multiple Classifications. In the event that any user of the city's sanitary sewage system, by the nature of its business, may fall within two or more of the above classifications, the rate for such user shall be the highest rate established for any such classification.

(8) Contract Rates. Rates for any user may be set by contract at the discretion of the city council. Users having their rates set by contract shall fall under this classification only during the duration of the contract term. Upon termination of said contract, the user will be charged under the other most applicable classification as determined by the finance director.

(9) Inactive Rates. An inactive rate is available to accounts where water consumption falls below 100 cubic feet per month for one continuous billing period or more. Inactive rates will only be available upon prior notice to the city. Inactive rates for all classifications shall be 50 percent of the minimum base monthly charge per classification.

(10) Low-Income Senior Citizen and Low-Income Disabled Rates.

(a) Low-income senior citizens or low-income disabled persons who are customers of the utility shall be eligible to apply for sewer service at 70 percent of the monthly minimum charge, and full charge for all overage consumption.

(b) Low-income households in which the principal financial resources are provided by a senior citizen or a disabled person, as defined in this chapter, may apply for these reduced rates. The city may require a customer who is receiving service at a reduced rate to provide information annually to confirm their continued eligibility for the reduced rate.

(c) The reduced rate provided by this subsection shall apply only to single-family residential services. (Ord. 1235 § 1, 2008; Ord. 1189 § 1, 2006; Ord. 1127 § 1, 2002; Ord. 1102 § 1, 2000; Ord. 1086 § 1, 1999; Ord. 938 § 1, 1995; Ord. 850 § 1, 1992; Ord. 770 § 1, 1989; Ord. 757 § 1, 1988; Ord. 673 § 1, 1985; Ord. 605, 1982; Ord. 577 § 1, 1981; Ord. 557 § 1, 1980; Ord. 470, 1977; Ord. 355 § 7, 1971; Ord. 241 § 2, 1962).

12.04.030 Connection fees, charges and costs.

(1) Applications for connection to the city sewage system shall be made to the public works department for approval of the design and inspection of the proposed connection.

(2) A permit fee to cover the cost of administration in the amount of $50.00 shall be charged for each application for city sewer service. Such fee shall be paid into the city general fund.

(3) A connection fee shall be charged at the time of construction of a building or segregation of a building into two or more units for each separate residence, multiple housing unit, business building or separate business unit within a building proposed to be served by city sewer according to the following schedule:

(a) Residential Sewer Connection Charges.

(i) Single-family residence (including mobile homes): $500.00.

(ii) Duplex (two dwelling units): $750.00.

(iii) Triplex (three dwelling units): $1,000.

(iv) Multifamily: $1,000 plus $250.00 per unit.

(b) Commercial.

(i) Six-inch service connection: $1,000.

Connection fees for service sizes other than six inches shall be determined by the public works director.

Such fee shall be paid into the sanitary sewage construction reserve fund. (Ord. 1102 § 1, 2000; Ord. 1086 § 1, 1999).

Chapter 12.08

SIDE SEWERS

(Reserved)

Chapter 12.12

DRAINAGE UTILITY FEES AND FUND

Sections:

12.12.010 Revenue fund created.
12.12.020 Drainage rates and charges.
12.12.030 *Repealed.*
12.12.040 Connection fees, charges and costs.
12.12.050 Permit required.
12.12.060 *Repealed.*
12.12.070 Drainage fees and charges for property outside of the city.
12.12.080 Development fees.
12.12.090 Construction fund created.

12.12.010 Revenue fund created.

There is created a special fund of the city to be known as the "drainage fund." Any and all charges, assessments, and revenues received for drainage purposes, or from any rental, use, services or sale of property attributable to the operation and management of such utility, shall be credited to and paid into such fund. (Ord. 1189 § 2, 2006; Ord. 563 § 1, 1981).

12.12.020 Drainage rates and charges.

For the furnishing of the service to the users and potential users of the city drainage system, the rates and charges per month are established for the classifications indicated below:

(1) Definitions.

(a) "Multiple business building" means one structure with multiple business units.

(b) "Customer" means the legal property owner at time of billing.

(c) "Accounts" means customer.

(d) "Low-income household" means a household in which the total annual income is below the very low-income level for the Seattle/Everett area as established and amended by survey from time to time by the United States Department of Housing and Urban Development.

(e) "Senior citizen" means a person of 62 years of age or older.

(f) "Disabled person" means a person with a physical or mental impairment that substantially limits one or more major life activities, such as walking, seeing, hearing,

speaking, learning, performing manual tasks, caring for oneself, etc.

(2) Rates and charges effective July 1, 2006:

Classification	Monthly Rate
(a) Residential Uses:	
(i) Single-family residences including a lot or lots up to 10,000 sq. ft. in area	$8.10
(ii) Multifamily residences including land up to 10,000 sq. ft. in area per unit	$4.05
(b) Commercial Uses:	
(i) For each single- or two-unit business building, including land up to 10,000 sq. ft. in area	$12.15
(ii) For each multi-business building, in excess of two units, including land up to 10,000 sq. ft., per unit	$4.05
(c) Land areas not provided for in subsections (2)(a) or (b) of this section shall be charged as follows:	
(i) Improved Land: For each 20,000 sq. ft. or part thereof of land improved with hard-surfaced parking lots, or other facilities or structures	$8.10

(3) Rates and charges effective January 1, 2007:

Classification	Monthly Rate
(a) Residential Uses:	
(i) Single-family residences including a lot or lots up to 10,000 sq. ft. in area	$10.45
(ii) Multifamily residences including land up to 10,000 sq. ft. in area per unit	$5.20
(b) Commercial Uses:	
(i) For each single- or two-unit business building, including land up to 10,000 sq. ft. in area	$15.65
(ii) For each multi-business building, in excess of two units, including land up to 10,000 sq. ft., per unit	$5.20
(c) Land areas not provided for in subsections (3)(a) or (b) of this section shall be charged as follows:	
(i) Improved Land: For each 20,000 sq. ft. or part thereof of land improved with hard-surfaced parking lots, or other facilities or structures	$10.45

(4) Rates and charges effective January 1, 2008:

Classification	Monthly Rate
(a) Residential Uses:	
(i) Single-family residences including a lot or lots up to 10,000 sq. ft. in area	$12.25
(ii) Multifamily residences including land up to 10,000 sq. ft. in area per unit	$6.10
(b) Commercial Uses:	
(i) For each single- or two-unit business building, including land up to 10,000 sq. ft. in area	$18.30
(ii) For each multi-business building, in excess of two units, including land up to 10,000 sq. ft., per unit	$6.10

	Classification	Monthly Rate
(c)	Land areas not provided for in subsections (4)(a) or (b) of this section shall be charged as follows:	
(i)	Improved Land: For each 20,000 sq. ft. or part thereof of land improved with hard-surfaced parking lots, or other facilities or structures	$12.25

(5) Low-Income Senior Citizen and Low-Income Disabled Rates.

(a) Low-income senior citizens or low-income disabled persons who are customers of the utility shall be eligible to apply for drainage service at 70 percent of the monthly charge.

(b) Low-income households in which the principal financial resources are provided by a senior citizen or a disabled person, as defined in this chapter, may apply for these reduced rates. The city may require a customer who is receiving service at a reduced rate to provide information annually to confirm their continued eligibility for the reduced rate.

(c) The reduced rate provided by this section shall apply only to single-family residential services. (Ord. 1235 § 2, 2008; Ord. 1189 § 2, 2006; Ord. 830 § 1, 1991; Ord. 807 § 1, 1990; Ord. 758 § 1, 1988; Ord. 672 § 1, 1985; Ord. 606 § 1, 1982; Ord. 578 § 1, 1981; Ord. 563 § 2, 1981).

12.12.030 Drainage of water other than precipitation.

Repealed by Ord. 1189. (Ord. 563 § 3, 1981).

12.12.040 Connection fees, charges and costs.

(1) Applications for connection to the city storm sewer system shall be made to the city finance director who will collect fees and forward the application to the public works department for approval of the design and inspection of the proposed connection.

(2) A permit fee to cover the cost of administration, in the amount of $50.00, shall be charged for each application for city storm sewer service. Such fee shall be paid into the city general fund.

(3) A connection charge of $200.00 shall be charged for each separate residence, multiple housing unit, or business building proposed to be served by a storm sewer. Such fee shall be paid into the drainage construction fund.

(4) Construction Costs and Fees.

(a) The cost of construction of storm sewer lines from the public storm sewer shall in all cases be borne by such persons connecting thereto.

(b) Cost of construction of storm sewer mains by developers and others except in the case of an LID or ULID shall be directly borne by the party extending the storm sewer main.

(c) Cost of upgrading the drainage facilities, storm sewer trunk lines, or pumping facility or the cost of a consulting engineer shall be considered part of the cost of the storm sewer extension and such costs as determined by the public works director or consulting engineer shall be remitted to the city finance director or the work completed and accepted by the city prior to issuance of any connection.

(d) The city may at its option construct storm sewer mains to serve an area. Any property connecting to a storm sewer main constructed by the city shall be subject to the fees and charges under this section plus a pro rata share of the construction costs of the extension based on 50 percent square footage of the area served and 50 percent front footage of properties to be served unless 75 percent of the own-

This page left intentionally blank.

ers of property in the area to be served agree on another method of apportionment which shall be subject to the approval of the city.

(e) Any property connected to a storm sewer main or open ditch constructed under an LID or ULID shall be subject to a construction fee based upon the same square footage and front footage assessments made on the property within the LID. (Ord. 1189 § 2, 2006; Ord. 695 § 11, 1986; Ord. 653 § 1, 1985; Ord. 563 § 4, 1981).

12.12.050 Permit required.

(1) It is unlawful for any person to make any connection with any public or private storm sewer without provisions of this chapter in relation thereto, unless a permit to do so from the public works director has been issued and is in force.

(2) Application for such permit shall be filed with the public works director stating the name of the owner, the correct address and legal description of the property to be served, dimensions and locations of any buildings or hard-surfaced improvements on the property and the whole course of the private storm sewer from the public storm sewer or other outlets to its connection with the building or property to be served. The application shall be submitted to the public works director for approval, who may change or modify the same and designate the manner and place in which such sewer shall be connected with the public storm sewer, and he shall endorse his approval upon the application if the same is acceptable to him.

(3) Upon approval of the application, the public works director shall issue for his records a permit card and storm sewer plan showing the size and location of the public storm sewer, the point of connection, the location of any buildings on the lot and any other such information as may be available and required.

(4) Upon approval of the application and issuance of the permit, it is unlawful to alter or to do any other work than is provided for in the permit.

(5) The public works director shall prepare and keep on file in his office all records of storm sewer connections showing the information obtained in the course of inspection of completed work done under the permit.

(6) The public works director may issue such a permit to the owner or occupant of any property to construct, extend, relay, repair or make connection to any public or private storm sewer or drainage channel, provided such owner or occupant complies with the applicable provisions of this chapter. (Ord. 1189 § 2, 2006; Ord. 563 § 5, 1981).

12.12.060 Lien charges.

Repealed by Ord. 1189. (Ord. 563 § 5, 1981).

12.12.070 Drainage fees and charges for property outside of the city.

When property outside of the city is served by storm sewers, drainage ditches, drainage channels or pumping facilities, charges for such drainage services, filing of liens or other fees or charges covered in this chapter shall be payable at the rate of 150 percent of the applicable charge or rate for service within the city. (Ord. 1189 § 2, 2006; Ord. 563 § 6, 1981).

12.12.080 Development fees.

At the time of application for a subdivision, short plat, planned unit development or binding site plan, a drainage assessment is to be submitted to the city clerk-treasurer in the amount of $400.00 plus $25.00 per lot. Such fee is to be credited to the drainage construction fund for the improvement of drainage facilities. (Ord. 1189 § 2, 2006; Ord. 695 § 12, 1986; Ord. 563 § 8, 1981).

12.12.090 Construction fund created.

There is created a special fund of the city to be known as the "drainage construction fund." Any and all development fees shall be credited and paid into such fund to provide for construction and improvement of drainage facilities. (Ord. 1189 § 2, 2006; Ord. 563 § 9, 1981).

Chapter 12.16

WATER UTILITY RATES AND CHARGES

Sections:

12.16.005 Definitions.
12.16.010 Water service rates.
12.16.014 Low-income senior citizen and low-income disabled rates.
12.16.016 Inactive rates.
12.16.020 Large seasonal users.
12.16.030 Fire hydrant service.
12.16.040 Service connection charge.
12.16.050 Fire suppression systems.

12.16.005 Definitions.

For the purposes of this chapter, the following definitions shall apply:

(1) "Quantity allowed" means the number of hundreds of cubic feet of water that may be consumed for the monthly minimum charge.

(2) "Overage" means the water that is consumed over the quantity allowed for each meter size in a month.

(3) "Low-income household" means a household in which the total annual income is below the very low-income level for the Seattle/Everett area as established and amended by survey from time to time by the United States Department of Housing and Urban Development.

(4) "Senior citizen" means a person 62 years of age or older.

(5) "Disabled person" means a person with a physical or mental impairment that substantially limits one or more major life activities, such as walking, seeing, hearing, speaking, learning, performing manual tasks, caring for oneself, etc.

(6) "Inactive" means an account with less than 100 cubic feet water consumption for one continuous billing period.

(7) "Customer" means the legal property owner at time of meter reading.

(8) "Account" means customer. (Ord. 1189 § 3, 2006; Ord. 994 § 1, 1996).

12.16.010 Water service rates.

(1) For the furnishing of service to users and potential uses of the city water system, the rates and charges per month are established for the classifications indicated below.

(2) Water Service Rates – Metered Water. The following rates will be applied for monthly water service:

(a) Monthly Minimum Charges by Meter Size – Effective January 1, 2005.

Meter Size (inches)	Quantity Allowed (hundreds of cubic feet)	Monthly Minimum Base Charge
3/4	6	$13.56
1	10	$24.60
1-1/2	20	$42.99
2	40	$79.78
3	80	$124.94
4	150	$187.39

(b) Charges for Consumption in Excess of the Quantity Allowed (by Hundreds of Cubic Feet) – Effective January 1, 2005.

(i) All amounts in excess of quantity allowed unless included in the monthly minimum base charge: $1.78 per 100 cubic feet from four to 50 hundreds of cubic feet.

(ii) All amounts in excess of 50 hundreds of cubic feet unless included in the monthly minimum base charge: $1.78 per 100 cubic feet in excess of 50 hundreds of cubic feet.

(c) Monthly Minimum Charges by Meter Size – Effective September 1, 2006.

Meter Size (inches)	Quantity Allowed (hundreds of cubic feet)	Monthly Minimum Base Charge
3/4	6	$14.21
1	10	$24.60
1-1/2	20	$47.32
2	40	$79.78
3	80	$137.63
4	150	$213.77

(d) Charges for Consumption in Excess of the Quantity Allowed (by Hundreds of Cubic Feet) – Effective September 1, 2006.

(i) All amounts in excess of quantity allowed, unless included in the monthly minimum base charge, shall be charged at $1.87 per each 100 cubic feet over the base quantity allowed.

(e) Monthly Minimum Charges by Meter Size – Effective January 1, 2007.

Meter Size (inches)	Quantity Allowed (hundreds of cubic feet)	Monthly Minimum Base Charge
3/4	6	$15.26
1	10	$25.48
1-1/2	20	$50.82
2	40	$81.34
3	80	$150.32
4	150	$240.14

(f) Charges for Consumption in Excess of the Quantity Allowed (by Hundreds of Cubic Feet) – Effective January 1, 2007.

(i) All amounts in excess of quantity allowed, unless included in the monthly minimum base charge, shall be charged at $2.00 per each 100 cubic feet over the base quantity allowed.

(g) Monthly Minimum Charges by Meter Size – Effective January 1, 2008.

Meter Size (inches)	Quantity Allowed (hundreds of cubic feet)	Monthly Minimum Base Charge
3/4	6	$16.37
1	10	$27.34
1-1/2	20	$54.51
2	40	$87.25
3	80	$163.01
4	150	$266.52

(h) Charges for Consumption in Excess of the Quantity Allowed (by Hundreds of Cubic Feet) – Effective January 1, 2008.

(i) All amounts in excess of quantity allowed, unless included in the monthly minimum base charge, shall be charged at $2.15 per each 100 cubic feet over the base quantity allowed.

(j) Monthly Minimum Charges by Meter Size – Effective January 1, 2009.

Meter Size (inches)	Quantity Allowed (hundreds of cubic feet)	Monthly Minimum Base Charge
3/4	6	$17.57
1	10	$29.34
1-1/2	20	$58.51
2	40	$93.65
3	80	$175.70
4	150	$292.89

(k) Charges for Consumption in Excess of the Quantity Allowed (by Hundreds of Cubic Feet) – Effective January 1, 2009.

(l) All amounts in excess of quantity allowed, unless included in the monthly minimum base charge, shall be charged at $2.31 per each 100 cubic feet over the base quantity allowed.

(m) Water Service Outside the City Limits. Rates for services outside of the city of Stanwood shall be city rates as adopted, plus 45 percent.

(3) Conditions.

(a) In computation of bi-monthly bills for service, the monthly minimum base charge and the quantity allowed for each rate block shall be multiplied by two.

(b) When multiple dwelling units, each having bathroom and/or kitchen facilities within a building, are served by a single meter connection, the minimum charge per month shall be the minimum monthly charge for a three-quarter-inch meter times the number of dwellings served by the single meter. (Ord. 1189 § 3, 2006; Ord. 1128 § 1, 2002; Ord. 1101 § 1, 2000; Ord. 1085 § 1, 1999; Ord. 994 §§ 2 – 5, 1996; Ord. 831 § 1, 1991; Ord. 808 § 1, 1990; Ord. 788 § 1, 1989; Ord. 749 § 1, 1988; Ord. 723 §§ 1, 2, 1987; Ord. 715 § 1, 1986; Ord. 709 § 1, 1986).

12.16.014 Low-income senior citizen and low-income disabled rates.

(1) Low-income senior citizens or low-income disabled persons who are customers of the utility shall be eligible to apply for water service at 70 percent of the monthly minimum charge, and full charge for all overage consumption.

(2) Low-income households in which the principal financial resources are provided by a senior citizen or a disabled person, as defined in this chapter, may apply for these reduced rates. The city may require a customer who is receiving service at a reduced rate to provide information annually to confirm their continued eligibility for the reduced rate.

(3) The reduced rate provided by this section shall apply only to three-quarter-inch single-family residential services. (Ord. 1189 § 3, 2006; Ord. 1101 § 1, 2000; Ord. 1085 § 1, 1999; Ord. 994 § 6, 1996).

12.16.016 Inactive rates.

An inactive rate is available to accounts where consumption falls below 100 cubic feet for one continuous billing period or more. Inactive rates will only be available upon prior notice to the city. Inactive rates for all meter sizes shall be at 50 percent of the minimum monthly base water charge by meter size. (Ord. 1189 § 3, 2006; Ord. 1101 § 1, 2000; Ord. 1085 § 1, 1999; Ord. 994 § 7, 1996).

12.16.020 Large seasonal users.

(1) Applicable to all users who:

(a) Consume more than 1,000,000 cubic feet per year; and

(b) Consume water at a rate of more than 100 gallons per minute (GPM); and

(c) Consume more than 20 percent of their annual water use in 30 consecutive calendar days.

(2) Demand Charge. Large seasonal users shall pay a demand charge. The demand charge shall be in accordance with the following formula:

(a) Effective January 1, 2005, Demand Charge – $1.59 times (peak day water use for 2004 in GPM).

(b) Effective September 1, 2006, Demand Charge – $1.67 times (peak day water use for 2005 GPM).

(c) Effective January 1, 2007, Demand Charge – $1.79 times (peak day water use for 2006 GPM).

(d) Effective January 1, 2008, Demand Charge – $1.92 times (peak day water use for 2007 GPM).

(e) Effective January 1, 2009, Demand Charge – $2.06 times (peak day water use for 2008 GPM).

(3) Consumption Charge. In addition to the demand charge, large seasonal users shall pay a consumption charge equal to:

(a) Effective January 1, 2005, the annual average water consumption over the five previous calendar years divided by 12 times $1.21 per 100 cubic feet.

(b) Effective September 1, 2006, the annual average water consumption over the five previous calendar years divided by 12 times $1.27 per 100 cubic feet.

(c) Effective January 1, 2007, the annual average water consumption over the five previous calendar years divided by 12 times $1.36 per 100 cubic feet.

(d) Effective January 1, 2008, the annual average water consumption over the five previous calendar years divided by 12 times $1.46 per 100 cubic feet.

(e) Effective January 1, 2009, the annual average water consumption over the five previous calendar years divided by 12 times $1.57 per 100 cubic feet.

Any city utility tax is in addition to the above rates. (Ord. 1189 § 3, 2006; Ord. 1128 § 1, 2002; Ord. 1101 § 1, 2000; Ord. 1085 § 1, 1999; Ord. 994 § 8, 1996; Ord. 715 § 1, 1986; Ord. 709 §1, 1986).

12.16.030 Fire hydrant service.

(1) Hydrant Use Fee. Persons drawing water from or utilizing city water from a hydrant shall pay a use fee of $50.00 per day.

(2) Rate per Month. Fire hydrants owned and maintained by the customer:

Each hydrant	$2.50 per month

(Ord. 1189 § 3, 2006; Ord. 1101 § 1, 2000; Ord. 1085 § 1, 1999; Ord. 715 § 1, 1986; Ord. 709 § 1, 1986).

12.16.040 Service connection charge.

(1) A permit fee to cover the cost of administration in the amount of $50.00 shall be charged for each application for city water service. Such fee shall be paid into the city general fund.

(2) Service Connection Charge. Each separate service connection shall pay a fee per meter size as follows:

3/4″ or smaller	$600.00
1″	$700.00
1-1/2″	$2,000.00
2″	$2,500.00

Service connection charges for meters larger than two inches shall be determined by the public works director. (Ord. 1189 § 3, 2006; Ord. 1101 § 1, 2000; Ord. 1085 § 1, 1999; Ord. 715 § 1, 1986; Ord. 709 § 1, 1986).

12.16.050 Fire suppression systems.

(1) Rate per Month. Effective January 1, 2007, buildings with installed fire suppression systems owned and maintained by the customer shall be billed at $2.50 per month. (Ord. 1189 § 3, 2006).

Chapter 12.18

WATER UTILITY REGULATIONS

Sections:

12.18.010 Purpose.
12.18.020 Definitions.
12.18.030 Cross-connections – Prohibited.
12.18.040 Cross-connections – Standards.
12.18.050 Cross-connections – Responsibility.
12.18.060 Cross-connections – Service prerequisites.
12.18.070 Cross-connections – Approval required.
12.18.080 Cross-connections – Right of entry.

12.18.010 Purpose.

The purpose of this chapter is to protect the water supply of the city of Stanwood water system from contamination or pollution from potential cross-connections; promote the elimination or control of existing or potential cross-connections. (Ord. 721 § 1, 1987).

12.18.020 Definitions.

(1) "Airbreak" is a physical separation which may be a low inlet into the indirect waste receptor from the fixture, appliance or device indirectly connected.

(2) "Airgap" is the unobstructed vertical distance through the free atmosphere between a supply line outlet and overflow rim of a receiving vessel. This separation must be at least twice the inside diameter of the supply line, but never less than one inch.

(3) "Backflow" is the flow of water or other liquids, mixtures or substances into the distributing pipes of a potable supply of water from any source or sources other than its intended source (see "Back-siphonage").

(4) "Backflow connection" or condition is any arrangement whereby backflow can occur.

(5) "Backflow preventer" is a device or means to prevent backflow into the potable water system.

(6) "Back-siphonage" is the flowing back of used, contaminated, or polluted water from a plumbing fixture or vessel into a water supply

pipe due to a negative pressure in such pipe (see "Backflow").

(7) "Cross-connection" is any connection or arrangement, physical or otherwise, between a potable water supply system and any plumbing fixture or any tank, receptacle, equipment or device, through which it may be possible for non-potable, used, unclean, polluted and contaminated water, or other substances to enter into any part of such potable water system under any condition. (Ord. 721 § 2, 1987).

12.18.030 Cross-connections – Prohibited.

The installation or maintenance of any cross-connection which would endanger the water supply of the city of Stanwood water system is prohibited. Any such cross-connection now existing or hereafter installed is hereby declared unlawful and shall be abated immediately. (Ord. 721 § 3, 1987).

12.18.040 Cross-connections – Standards.

The control or elimination of cross-connections shall be in accordance with WAC 248-54-285. The policies, procedures, and criteria for determining appropriate levels of protection shall be in accordance with the *Accepted Procedure and Practice in Cross Connection Control Manual – Pacific Northwest Section – American Water Works Association*, Third Edition, or any superseding edition. (Ord. 721 § 4, 1987).

12.18.050 Cross-connections – Responsibility.

It shall be the responsibility of the city of Stanwood department of public works to protect the potable water system from contamination or pollution due to cross-connection. (Ord. 721 § 5, 1987).

12.18.060 Cross-connections – Service prerequisites.

Water service to any premises shall be contingent upon the customer providing cross-connection control in a manner approved by the Stanwood department of public works. (Ord. 721 § 6, 1987).

12.18.070 Cross-connections – Approval required.

Backflow devices required to be installed shall be a model approved by the state Department of Social and Health Services and shall be tested annually. (Ord. 721 § 7, 1987).

12.18.080 Cross-connections – Right of entry.

Authorized employees of the city of Stanwood public works department with proper identification shall have free access at reasonable hours of the day, to all parts of a premises or within buildings to which water is supplied. Water service may be refused or terminated to any premises for failure to allow necessary inspections. (Ord. 721 § 8, 1987).

Chapter 12.20

UTILITY BILLING REGULATIONS

Sections:

12.20.010 Billing and payment policy.
12.20.020 Assessing fees and penalties for nonpayment and delinquency.
12.20.030 Termination of service.
12.20.040 Payment required before service restoration.
12.20.050 Lien rights.
12.20.060 Adjustment to bills.

12.20.010 Billing and payment policy.

(1) Bi-monthly billings shall be mailed to the address of the owner of the property being served by the utilities, as the address appears in the records of the city utility department. Upon written request of the owner, billing statements may be sent directly to the occupant of the property being served; however, in such cases the owner shall remain liable for payment of the bill, and the property shall remain subject to a lien for delinquent account.

(2) All payments on utility bills shall be applied first to the sewer balance, second to the drainage balance, and third to the water balance. Penalties and other charges are allocated proportionately to each utility.

(3) In the event that any fees or charges assessed for such services are not paid within 40 calendar days after mailing of the bills for such services, they shall be considered delinquent and shall automatically constitute a lien against the property to which the services were rendered. (Ord. 1189 § 4, 2006; Ord. 1101 § 2, 2000; Ord. 1085 § 2, 1999; Ord. 748 § 1, 1988).

12.20.020 Assessing fees and penalties for nonpayment and delinquency.

(1) Delinquency. A utility account is considered delinquent when the customer or occupant receiving the service fails to pay the utility charges within 40 calendar days after the billing date. Termination of service does not relieve the customer of the obligation to pay delinquent accounts and charges.

(2) Service Restoration Charge. A turn-on charge of $25.00 shall be assessed to the property owner account at the time of request for restoration of water service.

(3) Late Penalty. For each notice sent to a utility customer advising the customer that an account is delinquent or the utility service will be discontinued by reason of the delinquency, there shall be a late penalty charge added to the account of five percent of the unpaid balances. The finance director, or his/her designee, is authorized to waive the late penalty charge under the following circumstances:

(a) Where a utility customer has made arrangements with the city, prior to the date the billing is due, for deferral of the payment of the bill; or

(b) In such circumstances where, in the judgment of the finance director or his/her designee, the customer can demonstrate a bona fide economic hardship.

(4) Other Fees and Charges.

(a) If a utility account is dishonored by the drawer's bank by reason of insufficient funds, a surcharge of $20.00 shall be added to the utility account.

(b) If a utility account is liened by reasons of nonpayment for up to four months, the customer shall be responsible for payment of all lien recording fees. These lien charges shall be assessed on utility account balances. (Ord. 1189 § 4, 2006; Ord. 1101 § 2, 2000; Ord. 1085 § 2, 1999; Ord. 748 § 2, 1988).

12.20.030 Termination of service.

Water service may be discontinued by the city for delinquent and unpaid charges as specified in SMC 12.20.020. (Ord. 1189 § 4, 2006; Ord. 1101 § 2, 2000; Ord. 1085 § 2, 1999; Ord. 748 § 3, 1988).

12.20.040 Payment required before service restoration.

Water service may not be restored to the premises until all utility billing charges as specified in SMC 12.20.020 due and owing have been satisfied. (Ord. 1189 § 4, 2006; Ord. 1101 § 2, 2000; Ord. 1085 § 2, 1999; Ord. 748 § 4, 1988).

12.20.050 Lien rights.

(1) Liens against the property for up to four months of unpaid charges shall encumber the property, and shall be the obligation of the owner of the property, its heirs, successors, and assigns, until the same is paid in full. The city may enforce the lien by shutting off water services until all delinquent and unpaid charges are paid in full.

(2) Nothing in this chapter shall be construed as abridging the lien rights of the city of Stanwood, or other legally established sanctions. (Ord. 1189 § 4, 2006).

12.20.060 Adjustments to bills.

(1) In the event a meter fails to register the correct amount of water used, the customer will be charged at the average rate of monthly consumption for the previous 12 months as shown by the meter when in working order.

(2) In the event a leak or failure of a private water system or private service between the meter and the structure located on private property results in excess consumption, the city may, through a determination of the city finance director, provide for a rate adjustment up to 50 percent of the volume consumed in any one billing period in excess of the bimonthly average of water consumed over the previous 12 months at that service address.

(a) Customers shall be required to provide proof of repair to leak or failure prior to receiving any rate adjustment.

(b) Application for the credit or adjustment must be made in written form and approved by the city finance director or his/her designee.

(c) No more than one application for credit may be considered per service address in any 24-month period. (Ord. 1189 § 4, 2006).

Chapter 12.30

RIGHT-OF-WAY USE PERMITS

Sections:

12.30.010 Authorization.
12.30.020 Contents.
12.30.030 Fee.
12.30.040 Hold harmless.
12.30.050 Requirements.
12.30.060 Deposit of funds.

12.30.010 Authorization.

The public works department is authorized to establish a system for permitting right-of-way use for utilities. The system shall consist of an application and a permit. (Ord. 778 § 1, 1989).

12.30.020 Contents.

The permit shall contain standard construction requirements and special construction requirements and conditions. (Ord. 778 § 2, 1989).

12.30.030 Fee.

A fee shall be paid for each such permit, at time of application, as provided for in SMC 3.30.075. (Ord. 1001, 1997; Ord. 778 § 3, 1989).

12.30.040 Hold harmless.

Permits shall also include statements regarding limitations, assignments, revocation and a statement that the permittee shall hold harmless the city of Stanwood. (Ord. 778 § 4, 1989).

12.30.050 Requirements.

A right-of-way use permit shall be required for service lines for individual properties or main extensions within the right-of-way of 60 feet or less (SMC 3.30.075). Construction within the right-of-way of more than 60 feet shall also be charged as provided for in SMC 3.30.075. (Ord. 1001, 1997; Ord. 778 § 5, 1989).

12.30.060 Deposit of funds.

For each right-of-way use permit for utilities, the funds shall be deposited into the appro-

priate construction fund for the affected city utility. In the case of private utilities, such fees shall be deposited in the street construction fund. (Ord. 1001, 1997; Ord. 778 § 6, 1989).

Chapter 12.40

PLANT INVESTMENT CHARGE

Sections:

12.40.010 Purpose.
12.40.020 Permits.
12.40.030 Property owner's responsibilities.
12.40.040 Plant investment charge.
12.40.045 Additional water plant investment charge for Cedarhome benefit area.
12.40.050 Review of rates.
12.40.060 Collection.
12.40.070 Segregation and use of revenue.
12.40.080 Credits.

12.40.010 Purpose.

The city council of the city of Stanwood, Washington, has determined that it is reasonable and in the public interest to enact and impose a "plant investment charge" for the purpose of recovering an equitable share of the costs of water, sewer and drainage facilities from those properties within the utility service areas which, as a part of their development and use, create needs for those facilities. The city council finds that the public would benefit from a logical long range approach to the financing of necessary facilities. Experience has demonstrated that the lack of such provision casts an unfair and unexpected burden on taxpayers and residences in the form of taxes, bond interest costs and assessments when core or central facilities become inadequate, causing a crisis. Operating from crisis to crisis is wasteful, unsafe and no longer an acceptable method of local government, and debt financing should be minimized wherever possible. The "plant investment charge" herein described is designed and calculated to be of such amount as will eventually create reasonable reserves to pay the public's fair share of basic and essential service facilities as the need arises. (Ord. 1107, 2001; Ord. 787 § 2, 1989).

12.40.020 Permits.

Owners of premises within the city utility service areas adjacent to and abutting upon the sanitary sewer system, water system, or drainage system, and which premises has not been

previously assessed under a local improvement district, or some other method, may connect those premises to and utilize service from such systems upon receipt of a permit issued by the director of public works. Such permit shall be issued only upon written application to the director by the owner of the premises to be served and subject to the following terms and conditions:

(1) Payment of the appropriate fees for the systems:

(a) Water: Plant investment charge for water;

(b) Sewer: Plant investment charge for sewer;

(c) Drainage: Plant investment charge for drainage.

(2) The plant investment charges are separate and additional to the permit for water service connection, sewer connection, and drainage connection. (Ord. 1107, 2001; Ord. 787 § 3, 1989).

12.40.030 Property owner's responsibilities.

(1) The property owner warrants that he/she is the owner of the property with full authority to bind the property with the covenants and conditions contained in the Stanwood Municipal Code.

(2) The property owner shall subject his property to the resolutions and ordinances of the city, and shall use the public sewers, water mains and drainage mains of the city in accordance with the rules, regulations and ordinances of the city, as they may be amended from time to time, and the property shall be subject to the regular schedule of sewer, water service and drainage charges of the city, as may from time to time be fixed by the city for its use classification, including, if the city so provides, a reasonable split rate for properties served in particular areas.

(3) The property described in the permit shall be the only property served with sewer, water and drainage service.

(4) The property shall be subject to liens, penalties and interest for nonpayment of sewer, water service and drainage charges, to the same extent as any other property served by the city.

(5) Credit shall be given on any future assessment in a local improvement district or utility local improvement district for any charge in lieu of assessment paid for that property, or any reasonable costs incurred by the property owner and allowed by the public works director or other authorized representative in installing sewer, water and drainage lines, which have been deeded to the city.

(6) Building sewers and water mains and other appurtenant facilities constructed and installed by the property owner shall be subject to the permit, design review, construction, inspection, connection, conveyance and other requirements of this chapter, including the required fees and charges.

(7) There shall be paid for the property plant investment charges as required by SMC 12.40.040.

(8) To protect the interests of the city, the public works director, city engineer, or other authorized representative of the city may require other conditions and provisions as the individual case may warrant, including, but not limited to, reasonable design requirements, design review and inspection requirements, and protective and safety requirements. (Ord. 1107, 2001; Ord. 787 § 4, 1989).

12.40.040 Plant investment charge.

(1) Water Plant Investment Charge.

(a) The city council hereby finds and determines that the capital cost of the city's water system, including pumps, wells, distribution lines, reservoirs and rights-of-way is $23,595,125. The capital cost of such system has been borne by the city and its water system users. Such water system will be utilized by newly connecting properties, and the capital cost, as applied to buildings presently served, is $7,060 per each three-quarter-inch water meter.

(b) Beginning June 15, 2006, and thereafter, in addition to other fees imposed by ordinance or pursuant to agreements, there is hereby imposed upon the owners of property seeking to provide water service to their property by connecting to the city's water system,

a plant investment charge, determined by multiplying the total number of equivalent water connections proposed by $5,200. Equivalent connections and plant investment charges for all buildings shall be as follows:

Service Connection Size	Equivalent Connection	Charge
Up to 3/4″	1.00	$5,200
1″	1.67	$8,684
1-1/2″	3.33	$17,316
2″	5.33	$27,716
3″	10.00	$52,000
4″	16.67	$86,684
6″	33.33	$173,316
8″	53.33	$277,453

(2) Sewer Plant Investment Charge.

(a) The city council hereby finds and determines that the capital cost of the city's sewer system, including pumps, collection pipelines, sewer treatment plant, and rights-of-way is $23,321,044. The capital cost of such system has been borne by the city and its sewer system users. Such sewer system will be utilized by newly connecting properties and the capital cost, as applied to buildings presently served is $4,040 per each three-quarter-inch water meter.

(b) Beginning June 15, 2006, and thereafter, in addition to other fees imposed by ordinance or pursuant to agreements, there is hereby imposed upon the owners of property seeking to provide sewer service to their property by connecting to the city's sewer system, a plant investment charge, determined by multiplying the total number of equivalent connections by $4,040. Equivalent connections and plant investment charges for all buildings shall be as follows:

Service Connection Size	Equivalent Connection	Charge
Up to 3/4″	1.00	$4,040
1″	1.67	$6,746
1-1/2″	3.33	$13,453
2″	5.33	$21,533
3″	10.00	$40,400
4″	16.67	$67,347
6″	33.33	$134,653
8″	53.33	$215,453

(3) Drainage Plant Investment Charge.

(a) The city council hereby finds and determines that the capital cost of the city's drainage system, including pumps, collection pipelines and rights-of-way is $3,270,401. The capital cost of such system has been borne by the city and its drainage system users. Such drainage system will be utilized by newly developed properties, and the capital cost, as applied to buildings presently served, is $600.00 per each equivalent unit.

(b) Beginning June 15, 2006, and thereafter, in addition to other fees imposed by ordinance or pursuant to agreements, there is hereby imposed upon the owners of property seeking to develop within the city limits a drainage plant investment charge determined by multiplying the total number of equivalent residential units (ERU) by $600.00.

(i) Residential. An equivalent residential unit (ERU) is determined to be 3,000 square feet of impervious area. This is based on a lot size of up to 10,000 square feet. For plant investment charges for residential lots larger than 10,000 square feet, the ERUs will be calculated on the same basis as nonresidential development.

(ii) Nonresidential Development (Includes Multifamily Dwellings). Drainage plant investment charges for nonresidential development shall be calculated based on the number of equivalent residential units of impervious area of the proposed development, including fractions thereof. For example:

(A) 5,500 square feet of impervious area/3,000 = 1.83 x $600.00 = $1,100;

(B) 6,400 square feet of impervious area/3,000 = 2.13 x $600.00 = $1,278. (Ord. 1190 § 1, 2006; Ord. 1107, 2001; Ord. 1078, 1999; Ord. 940 § 1, 1995; Ord. 849 §§ 1, 2, 1992; Ord. 813 § 1, 1991; Ord. 787 § 5, 1989).

12.40.045 Additional water plant investment charge for Cedarhome benefit area.

(1) The city council hereby finds and determines that the capital costs of water system improvements in the Cedarhome area are $2,732,000. Said water system improvements will be utilized by newly connecting properties in the Cedarhome benefit area and the capital cost for each three-quarter-inch water meter shall be $2,570.

(2) The Cedarhome benefit area is hereby defined as that area shown in Exhibit A-1, titled Cedarhome Benefit Area and Exhibit A-2, titled Cedarhome Benefit Area Tax Account Numbers, attached to the ordinance codified in this section and incorporated by this reference.

(3) In addition to other fees imposed by ordinance or pursuant to agreements, there is hereby imposed upon the properties in the Cedarhome benefit area seeking to obtain water service by connecting to the city's water system, a plant investment charge, determined by multiplying the total number of equivalent connections proposed by $2,570.

(a) Equivalent connections and plant investment charges for all buildings shall be as follows:

Service Connection Size	Equivalent Connection	Charge
Up to 3/4″	1.00	$2,570
1″	1.67	$4,292
1-1/2″	3.33	$8,558
2″	5.33	$13,698
3″	10.00	$25,700
4″	16.67	$42,842
6″	33.33	$85,658
8″	53.33	$137,058

(4) All funds derived under this section shall be segregated from all other funds of the city. The entire portion of the water plant investment charge for the Cedarhome benefit area shall be used for no other purpose than the design, installation, and construction of the 400 zone 500,000-gallon elevated reservoir and transmission main; and Cedarhome booster pump station or debt service thereon. (Ord. 1190 § 1, 2006; Ord. 1126 § 1, 2002).

12.40.050 Review of rates.

The plant investment charges, as set forth in this chapter, will be adjusted annually based upon the Engineering News-Record (ENR) Construction Cost Index (the 20-city average), for a period not to exceed five years. This cost index tracks changes in construction costs for municipal construction projects. After five years, or whenever the city's utility comprehensive plans or utility capital facility plans are updated and adopted by city council, whichever occurs first, the plant investment charges should be re-evaluated based on asset value, projected capital projects, projected growth, interest, and inflation. (Ord. 1190 § 1, 2006; Ord. 1107, 2001; Ord. 787 § 6, 1989).

12.40.060 Collection.

The plant investment charges are immediately due and payable upon, and concurrently with, the issuance of a valid building permit or a valid permit for connection to the sewer, water or drainage system of the city, whichever occurs first. (Ord. 1107, 2001; Ord. 787 § 7, 1989).

12.40.070 Segregation and use of revenue.

All funds derived from the plant investment charge are to be segregated by appropriate approved accounting practices from all other funds of the city. That portion of the plant investment charge calculated and collected on account of sewers shall be used for no other purpose than installing, constructing, and extending sewer facilities or debt service thereon; that portion of the plant investment charge calculated and collected on account of water shall be used for no other purpose than installing, constructing, and extending water facilities or debt service thereon; and, that portion of the plant investment charge calculated and collected on account of drainage shall be used for no other purpose than installing, constructing, and extending drainage facilities or debt service thereon. (Ord. 1107, 2001; Ord. 787 § 8, 1989).

12.40.080 Credits.

Credit may be granted under the provisions of this chapter toward the plant investment charge. Such credit may be granted when complying with the following guidelines:

(1) Water, sewer and drainage facilities and pipelines to be used for credit shall be installed in accordance with approved plans and specifications and accepted by the city for maintenance.

(2) Credit will not be granted in excess of the total charge for plant investment. (Ord. 1107, 2001; Ord. 787 § 9, 1989).

Chapter 12.45

EXTENSION OF CITY SERVICES OUTSIDE CITY LIMITS

Sections:

12.45.010 City's authority to provide service outside city limits.
12.45.020 Water or sewer service application.
12.45.030 Charges for water or sewer service.
12.45.040 Utility extension agreement.
12.45.050 Extensions for public health, safety or environmental reasons.

12.45.010 City's authority to provide service outside city limits.

(1) The city is authorized, pursuant to RCW 35.67.310 and 35.92.200, to provide sewer and water service to property outside the city limits. The city's provision of such service is not mandatory. In all circumstances in which the city agrees to provide water or sewer service to property beyond its limits, the applicants for such service must comply with all of the terms and conditions of this chapter.

(2) After designation of the city's urban growth area boundary by the county as contemplated by RCW 36.70A.110, the city is prohibited from annexing territory beyond such boundary (RCW 35A.14.005). Therefore, except to municipal corporations or quasi-municipal corporations, such as water, sewer or fire districts, and then only under the circumstances described in subsection (3) of this section, the city's extension of water and sewer service outside the city limits to property not contained within the city's urban growth area is not appropriate.

(3) The Growth Management Act, Chapter 36.70A RCW, has been amended to allow cities to provide water and sewer services in rural areas in those limited circumstances shown to be necessary to protect basic public health, safety and the environment, and when such services are financially supportable at rural densities and do not permit urban development (RCW 36.70A.110[4]). Applications for water and sewer service in rural areas or areas outside the city's urban growth area may be granted by the city council under the circum-

stances in this section, and under the procedures set forth in SMC 12.45.050. (Ord. 1122 § 1, 2002).

12.45.020 Water or sewer service application.

Any person owning property outside the city limits and desiring to have their property connected to the city's water supply system or sewer system shall make application at the office of the public works department on the appropriate form. Every such application shall be made by the owner of the property to be connected and supplied the service, or by his/her authorized agent. The applicant must state fully the purposes for which the water and/or sewer service is required. Applicants must agree to conform to the city's rules and regulations concerning water and sewer service set forth in this title, as the same now exists or may be amended in the future. If the city receives such a water service application and subsequently issues a water availability certificate, such certificate shall expire within one year of the date of issuance, if the applicant does not pay the required fees and request an actual hook-up or connection to the subject property within that time period. (Ord. 1122 § 1, 2002).

12.45.030 Charges for water or sewer service.

Applicants for water and/or sewer service to property outside the city limits shall be charged the rates and connection charges for such service as set forth in Chapter 12.04 SMC (sewer service), Chapter 12.16 SMC (water service), and Chapter 12.40 SMC (plant investment charges) as those code sections now exist or may hereafter be amended. All other additional charges applicable to water and/or sewer service to property within the city limits in this title shall also be imposed, where appropriate. (Ord. 1122 § 1, 2002).

12.45.040 Utility extension agreement.

Every applicant for water and/or sewer service requiring extension of utilities outside the city limits, except for municipal corporations or quasi-municipal corporations, such as

water, sewer or fire districts making application under SMC 12.45.050, must agree to sign a voluntary agreement with the city, which conditions the provision of the service on the following terms:

(1) Agreement to Run with the Property. The agreement shall be recorded against the property in the Snohomish County auditor's office, and shall constitute a covenant running with the land. All covenants and provisions of the agreement shall be binding on the owner and all other persons subsequently acquiring any right, title or interest in or to said property.

(2) Warranty of Title. The agreement shall be executed by the owner of the property, who shall also warrant that he/she is authorized to enter into such agreement.

(3) Annexation. Property owners requesting extension of city sewer and water into the unincorporated UGA shall agree to either annex immediately (if such property is located in the UGA), or shall sign a no protest agreement in which the property owner agrees to sign any annexation petition that is circulated in the future to annex their property, as long as the property is located within the UGA at the time of circulation.

(4) Costs of Design, Engineering and Construction of Extension. The owner shall agree to pay all costs of design, engineering and construction of the extension, which shall be accomplished to city standards and conform to plans approved by the city public works director. Costs of plan review and construction inspection shall also be paid by the owner.

(5) Plant Investment Charges. The owner shall be responsible for the payment of plant investment charges as defined by Chapter 12.40 SMC, as the equitable share of the costs of serving the property.

(6) Easements and Permits. The owner shall secure and obtain at the owner's sole cost and expense all permits, easements and licenses necessary to construct the extension.

(7) Dedication of Capital Facilities. The owner shall agree to dedicate all capital facilities constructed as part of the water and sewer extension (such as water or sewer main lines, pump stations, wells, etc.), at no cost to the city, upon the completion of construction, approval and acceptance by the city.

(8) Connection Charges. The owner shall be responsible for the payment of the connection charges set by the city in Chapters 12.04 and 12.16 SMC (as these chapters now exist or may hereafter be amended), as a condition of connecting to the city water and/or sewer system. Such connection charges shall be calculated at the rate schedules applicable at the time of actual connection.

(9) Special Assessment District. If, at the time of execution of the agreement, the city has formed a special assessment district to pay for capital project(s) related to service of the property, the owner shall agree to participate in the district and to waive his/her right to protest the assessment.

(10) Waiver of Right to Protest LID. If, at the time of execution of the agreement, the city has plans to construct certain improvements that would specially benefit the owner's property, the agreement shall specifically describe the improvement. The owner shall agree to sign a petition for the formation of an LID or ULID for the specified improvements at the time one is circulated, and to waive his/her right to protest formation of any such LID or ULID.

(11) Development of Property to Conform to City Comprehensive Plan and Development Standards.

(a) The owner shall agree to comply with the following development standards of the city of Stanwood, unless otherwise provided by this chapter:

(i) Chapter 12.45 SMC (standards for UGA utility extensions);

(ii) Chapter 16.10 SMC (standards for long plats);

(iii) Chapter 16.35 SMC (standards for short plats);

(iv) Chapters 17.30 through 17.79 SMC (permitted uses and dimensional and density requirements);

(v) Chapter 17.110 SMC (signs);

(vi) Chapters 17.115 through 17.135 SMC (critical areas protection);

(vii) Chapter 17.145 SMC (landscaping); and

(viii) Public works standards.

(b) The owner shall agree to comply with all elements of the city of Stanwood comprehensive plan, including but not limited to the city of Stanwood comprehensive water system plan and the city's wastewater facilities plan.

(c) The city council may elect to enter into a utility extension agreement with an owner who cannot meet one or more development standards as contained in subsection (11)(a) of this section only under the following conditions:

(i) The applicant demonstrates that there is a conflict between a particular city development standard and the corresponding Snohomish County standard that prevents an applicant from meeting both development regulations;

(ii) The applicant demonstrates that the proposed departure from one of the city's development standards listed in subsection (11)(a) of this section would result in a development that meets the intent of the applicable provision of the comprehensive plan, subdivision code, zoning code or public works standards;

(iii) The applicant demonstrates that the site of the proposed use is adequate in size and shape to accommodate such use and all yards, spaces, walls and fences, parking, loading, landscaping and other features necessary to ensure compatibility with and not inconsistent with the underlying zoning district;

(iv) Adequate public utilities are available to serve the proposal;

(v) The proposed use will have no significant adverse effect on existing uses or permitted uses or that deviate from the development standard listed in subsection (11)(a) of this section will not further aggravate any adverse effects; and

(vi) The establishment, maintenance and/or conducting of the uses for which the utility agreement is sought will not, under the circumstances of the particular case, be detrimental to the public welfare, injurious to the environment, nor shall the use be inconsistent with or injurious to the character of the neighborhood or contrary to its orderly development.

(12) Interlocal Agreements. If, at the time of execution of the agreement, the city and the county have approved any interlocal agreements governing the development of the Stanwood urban growth area, the development shall also be subject to the terms of the agreement(s) in place.

(13) Termination for Noncompliance. In addition to all other remedies available to the city for the owner's noncompliance with the terms of the agreement, the city shall have the ability to disconnect the utility, and for that purpose may at any time enter upon the property. (Ord. 1169 § 1, 2005; Ord. 1140 § 1, 2003; Ord. 1122 § 1, 2002).

12.45.050 Extensions for public health, safety or environmental reasons.

(1) Applications for water and sewer service to property outside the city's urban growth area boundary may only be approved if, in addition to all other requirements of this title, the applicant can demonstrate that the extension is necessary to protect basic public health, safety, welfare and the environment. This showing may include, among other documentation, an emergency order issued by the Department of Ecology relative to any sewer extension request.

(2) The city council shall review the application and may, in its sole discretion, allow the extension if the council finds:

(a) That the requested service is financially supportable at rural densities and does not permit urban development;

(b) That the city's NPDES permit will not be affected by the extension (if applicable); and

(c) That the extension is consistent with the goals of the city's water and sewer comprehensive plans and all other applicable law, including, but not limited to, the Public Water System Coordination Act (Chapter 70.116 RCW), the Growth Management Act, and the State Environmental Policy Act.

(3) The council's approval of any extension under the criteria in subsection (2) of this section may be conditioned upon the following:

(a) Restrictions may be placed on the hours that the city will accept sewage flow from the applicants;

(b) Restrictions may be placed on the amount of sewage flow or water provided to the applicant;

(c) For extensions outside the city's urban growth boundary area, the applicant shall have responsibility to maintain and operate its own facilities; and/or

(d) Any other conditions the council considers appropriate. (Ord. 1140 § 1, 2003; Ord. 1122 § 1, 2002).

Chapter 12.50

LATECOMER AGREEMENTS FOR WATER AND SEWER

Sections:

12.50.010 Purpose.
12.50.020 Definitions.
12.50.030 Limitations on latecomer agreement.
12.50.040 Effect of latecomer agreement.
12.50.050 Fees – Application.
12.50.060 Deadline for submittal of application.
12.50.070 Administrative fees and recording costs.
12.50.080 Assessment method.
12.50.090 Cost of construction to be examined by city engineer.
12.50.100 Approval and acceptance of water and/or sewer facilities by city.
12.50.110 City council approval and notice.
12.50.120 No requirement for execution of latecomer agreement.

12.50.010 Purpose.

The purpose of this chapter is to implement Chapter 35.91 RCW, and to describe the process for a property owner or developer to request the execution of a latecomer agreement with the city council for water and/or sewer facilities. (Ord. 1182 § 1, 2006).

12.50.020 Definitions.

The definitions set forth in this section shall apply throughout this chapter:

(1) "Cost of construction" means the cost incurred for design, acquisition for right-of-way and/or easements, permit and plan review fees, construction (including materials and installation), as required in order to create and install the water and/or sewer facilities in accordance with all applicable laws, ordinances and standards, including the city's public works standards. The cost of construction shall be documented in writing on final invoices or other documents showing the amounts paid by the owner. The city will not accept written estimates in determining the cost of construction. In the event of a disagree-

ment between the city and the owner concerning the cost of the water and/or sewer facilities, the city engineer's determination shall be final.

(2) "Engineer" means the city engineer or his/her designated representative.

(3) "Latecomer agreement" means a written contract between the city and one or more property owners providing for the partial reimbursement of the cost of constructing the water and/or sewer facilities. The latecomer agreement shall be a standard agreement approved as to form by the city attorney.

(4) "Water and/or sewer facilities" means storm, sanitary or combination sewers, pumping stations and disposal plants, water mains, hydrants, reservoirs, or appurtenances. (Ord. 1182 § 1, 2006).

12.50.030 Limitations on latecomer agreement.

The city council may execute a latecomer agreement for water and/or sewer facilities with a property owner who constructs water and/or sewer facilities:

(1) Within the city or within 10 miles from the city corporate limits, connecting with the city public water or city sewerage system to serve the area in which the real estate is located;

(2) To provide for a period of not to exceed 15 years for the reimbursement of such real estate owners and their assigns by any owner of real estate who did not contribute to the actual cost of such water and/or sewer facilities and who subsequently tap into or use the same (the "latecomer");

(3) To require that the latecomer pay his or her fair pro rata share of the cost of the construction of the water and/or sewer facilities, including not only those directly connected thereto, but also users connected to laterals or branches connecting thereto;

(4) To be effective as to any owner of real estate not a party to the latecomer agreement unless such latecomer agreement has been recorded in the office of the Snohomish County auditor prior to the time that the latecomer taps into or connects to said water and/or sewer facilities. (Ord. 1182 § 1, 2006).

12.50.040 Effect of latecomer agreement.

No person, firm or corporation shall be granted a permit or be authorized to hook up or use any such water and/or sewer facilities or extensions thereof during the period of time set forth in a recorded latecomer agreement without first paying to the city, in addition to any and all other costs and charges assessed for such hook-up or use or for the water lines or sewers constructed in connection therewith, the amount required by the latecomer agreement. Whenever any hook-up or connection is made into a water and/or sewer facility subject to a latecomer agreement, without such payment having first been made, the city may remove, or cause to be removed, such unauthorized hook-up or connection and all connecting tile or pipe located in the facility right-of-way and dispose of unauthorized material so removed without any liability whatsoever. (Ord. 1182 § 1, 2006).

12.50.050 Fees – Application.

A proposed latecomer agreement, including a description of the methodology and the pro rata share for each property, shall be submitted to the city, accompanied by:

(1) A nonrefundable application fee equal to five percent of the amount proposed for collection under the latecomer agreement;

(2) Paper and digital copies of as-built plans stamped by a Washington state licensed engineer or land surveyor;

(3) Bill(s) of sale;

(4) Itemized and quantified list of costs of construction, prepared, stamped and signed by a Washington state licensed civil engineer;

(5) An 18-inch by 24-inch scaled drawing stamped by either a Washington state licensed civil engineer or land surveyor showing the water and/or sewer facility size, location and the proposed areas potentially encumbered for this latecomer agreement, including dimensions, tax parcel numbers, sizes of parcels, useful elevations as needed by the city for determining benefit, all existing utility services and appurtenances. The map must also include the method proposed to be used by the owner to determine the assessment, i.e., frontage square footage and zone end termini;

(6) An eight and one-half inch by 11-inch vicinity map showing tax lot numbers and dollar amounts assessed on each lot. (Ord. 1182 § 1, 2006).

12.50.060 Deadline for submittal of application.

Applications for latecomer agreements shall be submitted to the city for approval after the city notifies the owner that the water and/or sewer facilities constructed are acceptable to the city for city operation and maintenance. For residential subdivisions, the application shall be submitted prior to final plat approval. For other types of developments not requiring a final plat approval, the application shall be submitted within 30 days after the city notifies the owner that the utilities are acceptable. Failure by the owner to submit a complete application prior to this deadline constitutes a waiver of the ability to request execution of a latecomer agreement with the city. (Ord. 1182 § 1, 2006).

12.50.070 Administrative fees and recording costs.

In addition to the fair pro rata charge imposed by the latecomer agreement, the city shall charge a fee of 10 percent of the amount collected from an owner under the latecomer agreement to cover the city's administrative costs of collecting and dispersing reimbursed amounts. Collected latecomer agreement fees disbursed to the contracting party shall be less the 10 percent charge. The owner of the real estate with whom the latecomer agreement is executed shall pay all costs of recording the latecomer agreement with the Snohomish County auditor's office, as required by law. (Ord. 1182 § 1, 2006).

12.50.080 Assessment method.

The city may use any method of assessment permitted by law including, but not limited to, the front-foot method, the zone end termini method, and square footage method. At the discretion of the public works director, the city may allow a proportionate payment if only a portion of a property is developed, with the balance to be paid when the rest of the property is developed. (Ord. 1182 § 1, 2006).

12.50.090 Cost of construction to be examined by city engineer.

The cost of construction of the water and/or sewer facilities shall be examined by the city engineer, prior to the city council meeting on the latecomer agreement. The city engineer shall provide a recommendation to the council to verify the examination of the cost of construction. (Ord. 1182 § 1, 2006).

12.50.100 Approval and acceptance of water and/or sewer facilities by city.

All water and/or sewer facilities proposed to be accepted for city ownership and maintenance (and later subject to a latecomer agreement) must be located on city-owned property or the necessary easements must be dedicated to the city prior to dedication such that the city may operate, maintain, demolish, reconstruct, improve or expand the water and/or sewer facilities in the future. (Ord. 1182 § 1, 2006).

12.50.110 City council approval and notice.

The city council shall have approval authority over latecomer agreements. Approval shall only be given after a public hearing held by the council or the hearing examiner on the agreement. Proper notice shall be met if the hearing is published in an official city newspaper with due notice sent to the affected property owners 10 days prior to the hearing. (Ord. 1182 § 1, 2006).

12.50.120 No requirement for execution of latecomer agreement.

Nothing in this chapter shall be construed as requiring the city to enter into such latecomer agreement. Nothing in this chapter requires the city to enter into a latecomer agreement on or after the timelines specified in SMC 12.50.060. (Ord. 1182 § 1, 2006).

ORDINANCE NO. 721

AN ORDINANCE OF THE CITY OF STANWOOD PROVIDING FOR REGULATION OF CROSS-CONNECTIONS.

WHEREAS, the City of Stanwood is a public purveyor of potable water to the City of Stanwood and its surrounding areas, and,
WHEREAS, contamination of the potable water system by its users could be caused by inadvertent cross connections, and,
WHEREAS, there is a need to protect the water system and the health and safety of the public,
THEREFORE the City Council of the City of Stanwood do ordain:

Section 1. PURPOSE

The purpose of this ordinance is to protect the water supply of the City of Stanwood Water System from contamination or pollution from potential cross connections; promote the elimination or control of existing or potential cross connections.

Section 2. DEFINITIONS

a. Airbreak - An airbreak is a physical separation which may be a low inlet into the indirect waste receptor from the fixture, appliance or device indirectly connected.

b. Airgap - An airgap is the unobstructed vertical distance through the free atmosphere between a supply line outlet and overflow rim of a receiving vessel. This separation must be at least twice the inside diameter of the supply line, but never less than 1 inch.

c. Backflow - Backflow is the flow of water or other liquids, mixtures or substances into the distributing pipes of a potable supply of water from any source or sources other than its intended source. (See Back-siphonage.)

d. Backflow Connection - Backflow connection or condition is any arrangement whereby backflow can occur.

e. Backflow Preventer - A backflow preventer is a device or means to prevent backflow into the potable water system.

f. Back-siphonage - Back-siphonage is the flowing back of used, contaminated, or polluted water from a plumbing fixture or vessel into a water supply pipe due to a negative pressure in such pipe. (See Backflow.)

g. Cross Connection - A cross connection is any connection or arrangement, physical or otherwise, between a potable water supply system and any plumbing fixture or any tank, receptacle, equipment or device, through which it may be possible for non-potable, used, unclean, polluted and contaminated water, or other substances to enter into any part of such potable water system under any condition.

Section 3. CROSS CONNECTIONS PROHIBITED

The installation or maintenance of any cross connection which would endanger the water supply of the City of Stanwood Water System is prohibited. Any such cross connection now existing or hereafter installed is hereby declared unlawful and shall be abated immediately.

Section 4. STANDARDS

The control or elimination of cross connections shall be in accordance with the State of Washington Administrative Code (WAC 248-54-285). The policies, procedures, and criteria for determining appropriate levels of protection shall be in accordance with the Accepted Procedure and Practice in Cross Connection Control Manual - Pacific Northwest Section - American Water Works Association, Third Edition, or any superseding edition.

Section 5. RESPONSIBILITY

It shall be the responsibility of the City of Stanwood Department of Public Works to protect the potable water system from contamination or pollution due to cross connection

CITY COUNCIL AGENDA
4.6 19 87 Section 4
File

4-1

Section 6. PENALTY

Water service to any premises shall be contingent upon the customer providing cross connection control in a manner approved by the Stanwood Department of Public Works.

Section 7. APPROVAL REQUIRED

Backflow devices required to be installed shall be a model approved by the State Department of Social and Health Services and shall be tested annually.

Section 8. RIGHT OF ENTRY

Authorized employees of the City of Stanwood Public Works Department with proper identification shall have free access at reasonable hours of the day, to all parts of a premises or within buildings to which water is supplied. Water service may be refused or terminated to any premises for failure to allow necessary inspections.

PASSED AND APPROVED This 20th day of April, 1987

CITY OF STANWOOD

Robert N. Larson

Robert N. Larson, Mayor

ATTEST:

Donald L. Glancy

Donald L. Glancy, City Clerk Treasurer

APPROVED AS TO FORM:

Henry S. Chapman

Henry S. Chapman, City Attorney

ORDINANCE NO. 1122

AN ORDINANCE OF THE CITY OF STANWOOD, WASHINGTON, AMENDING TITLE 12 OF THE CITY OF STANWOOD MUNICIPAL CODE TO INCLUDE CRITERIA FOR THE EXTENSION OF CITY SERVICES OUTSIDE THE CITY LIMITS.

WHEREAS, the Growth Management Act contemplates that urban services shall be best provided by cities and as such the Stanwood Comprehensive Plan anticipates growth in the Urban Growth Area (UGA); and

WHEREAS, the City of Stanwood is the sole purveyor of water and sewer services to the Stanwood UGA; and

WHEREAS, the City of Stanwood has adopted water and sewer comprehensive plans for providing services to development in the Stanwood UGA consistent with the provisions of the Stanwood Comprehensive Plan; and

WHEREAS, the City Council recognizes that properties located in the unincorporated UGA are likely to develop under County jurisdiction in the UGA and are also likely to annex to the City in the future; and

WHEREAS, the provision of water and sewer services does not represent the full range of city services that can be provided; and

WHEREAS, there are inherent costs to providing services that the City Council deems should be borne by the owner/developer; and

WHEREAS, the City Council has determined that it is in the best interest of the public health, safety, and welfare of the citizens of Stanwood that the City Council should set conditions upon which utilities will be extended.

NOW THEREFORE, THE CITY COUNCIL OF THE CITY OF STANWOOD DO ORDAIN AS FOLLOWS:

Section 1. SMC Title 12 Amended. SMC Title 12 is hereby amended to add Section 12.45 as follows:

12.45.010 City's authority to provide service outside city limits.
(1) The city is authorized, pursuant to RCW 35.67.310 and 35.92.200, to provide sewer and water service to property outside the city limits. The city's provision of such service is not mandatory. In all circumstances in which the city agrees to provide water or sewer service to property beyond its limits, the applicants for such service must comply with all of the terms and conditions of this chapter.
(2) After designation of the city's urban growth area boundary by the county as contemplated by RCW 36.70A.110, the city is prohibited from annexing territory beyond such boundary (RCW 35A.14.005). Therefore, except to municipal corporations or quasi-municipal corporations, such as water, sewer or fire districts, and then only under the circumstances described in subsection 3 of this section, the city's extension of water and sewer service outside the city limits to property not contained within the city's urban growth area is not appropriate.
(3) The Growth Management Act, Chapter 36.70A RCW, has been amended to allow cities to provide water and sewer services in rural areas in those limited circumstances shown to be necessary to protect basic public health, safety and the environment, and when such services are financially supportable at rural densities and do not permit urban development (RCW 36.70A.110[4]). Applications for water and sewer service in rural areas or areas outside the city's urban growth area may be granted by the city council under the circumstances in this section, and under the procedures set forth in SMC 12.45.050.

12.45.020 Water or sewer service application.
Any person owning property outside the city limits and desiring to have their property connected to the city's water supply system or sewer system shall make application at the office of the public works department on the appropriate form. Every such application shall be made by the owner of the property to be connected and supplied the service, or by his/her authorized agent. The applicant must state fully the purposes for which the water and/or sewer service is required. Applicants must agree to conform to the city's rules and regulations concerning water and sewer service set forth in this title, as the same now exists or may be amended in the future. If the city receives such a water service application and subsequently issues a water availability certificate, such certificate shall expire within one year of the date of issuance, if the applicant does not pay the required fees and request an actual hook-up or connection to the subject property within that time period.

12.45.030 Charges for water or sewer service.
Applicants for water and/or sewer service to property outside the city limits shall be charged the rates and connection charges for such service as set forth in SMC 12.04 (sewer service), 12.14 (water service), and 12.40 (plant investment charges) as those code sections now exist or may hereafter be amended. All other additional charges applicable to water and/or sewer service to property within the city limits in this title shall also be imposed, where appropriate.

12.45.040 Utility extension agreement.
Every applicant for water and/or sewer service outside the city limits, except for municipal corporations or quasi-municipal corporations, such as water, sewer or fire districts making application under SMC 12.45.050, must agree to sign an agreement with the city, which conditions the provision of the service on the following terms:
(1) Agreement to Run with the Property. The agreement shall be recorded against the property in the Snohomish County auditor's office, and shall constitute a covenant running with the land. All covenants and provisions of the agreement shall be binding on the owner and all other persons subsequently acquiring any right, title or interest in or to said property.
(2) Warranty of Title. The agreement shall be executed by the owner of the property, who shall also warrant that he/she is authorized to enter into such agreement.
(3) Costs of Design, Engineering and Construction of Extension. The owner shall agree to pay all costs of design, engineering and construction of the extension, which shall be accomplished to city standards and conform to plans approved by the city public works director. Costs of plan review and construction inspection shall also be paid by the owner.
(4) Plant Investment Charges. The owner shall be responsible for the payment of plant investment charges as defined by SMC 12.40, as the equitable share of the costs of serving the property.
(5) Easements and Permits. The owner shall secure and obtain at the owner's sole cost and expense, all permits, easements and licenses necessary to construct the extension.
(6) Dedication of Capital Facilities. The owner shall agree to dedicate all capital facilities constructed as part of the water and sewer extension (such as water or sewer main lines, pump stations, wells, etc.), at no cost to the city, upon the completion of construction, approval and acceptance by the city.
(7) Connection Charges. The owner shall be responsible for the payment of the connection charges set by the city in SMC 12.04 and 12.16 (as these sections now exist or may hereafter be amended), as a condition of connecting to the city water and/or sewer system. Such connection charges shall be calculated at the rate schedules applicable at the time of actual connection.
(8) Special Assessment District. If, at the time of execution of the agreement, the city has formed a special assessment district to pay for capital project(s) related to service of the property, the owner shall agree to participate in the district and to waive his/her right to protest the assessment.
(9) Waiver of Right to Protest LID. If, at the time of execution of the agreement, the city has plans to construct certain improvements that would specially benefit the owner's property, the agreement shall specifically describe the improvement. The owner shall agree to sign a petition for the formation of an LID or ULID for the specified improvements at the time one is circulated, and to waive his/her right to protest formation of any such LID or ULID.
(10) Development of Property to Conform to City Code.
(a) The owner shall agree to comply with the following requirements of the city's land use plan, zoning code, and public works standards:

(i) Land use;
(ii) Maximum density as determined for the site by the Stanwood Comprehensive Plan;
(iii) Minimum lot size as determined for the site by Stanwood Zoning Code (SMC Title 17); and
(iv) The public works standards for sewer and water utilities.

(b) The city council may grant exceptions to the requirements contained in this subsection only under the following conditions:

(i) The applicant must demonstrate that the proposed departure from the city's land use standards, zoning code, or public works standards would result in a development which meets the intent of the applicable provisions of the comprehensive plan, zoning code or public works standards, based upon compliance with all of the following criteria:

(A) That the site of the proposed use is adequate in size and shape to accommodate such use and all yards, spaces, walls and fences, parking, loading, landscaping and other features necessary to insure compatibility with and not inconsistent with the underlying zoning district;

(B) That adequate public utilities are available to serve the proposal;

(C) That the proposed use will have no significant adverse effect on existing uses or permitted uses or that deviation from the standard city code will not further aggravate any adverse effects;

(D) That the establishment, maintenance and/or conducting of the uses for which the utility agreement is sought will not, under the circumstances of the particular case, be detrimental to the public welfare, injurious to the environment, nor shall the use be inconsistent with or injurious to the character of the neighborhood or contrary to its orderly development.

(11) Interlocal Agreements. If, at the time of execution of the agreement, the City and the County have approved any interlocal agreements governing the development of the Stanwood urban growth area, the development shall also be subject to the terms of the agreement(s) in place.

(12) Termination for Noncompliance. In addition to all other remedies available to the city for the owner's noncompliance with the terms of the agreement, the city shall have the ability to disconnect the utility, and for that purpose may at any time enter upon the property.

12.45.050 Extensions for public health, safety or environmental reasons.

(1) Municipal corporations or quasi-municipal corporations such as water, sewer or fire districts may make application for water or sewer service to property outside the city urban growth area boundary if, in addition to all other requirements of this title, the applicant can demonstrate that the extension is necessary to protect basic public health, safety, welfare and/or the environment. This showing may include, among other documentation, an emergency order issued by the Department of Ecology relative to any sewer extension request.

(2) The city council shall review the application and may, in its sole discretion, allow the extension if the council finds:

(a) That the requested service is financially supportable at rural densities and does not permit urban development;

(b) That the city's NPDES permit will not be affected by the extension (if applicable); and

(c) That the extension is consistent with the goals of the city's water and sewer comprehensive plans and all other applicable law, including, but not limited to, the Public Water System Coordination Act (Chapter 70.116 RCW), and the State Environmental Policy Act (Chapter 42.31C RCW).

(3) The council's approval of any extension under the criteria in subsection 2 of this section may be conditioned upon the following:

(a) Restrictions may be placed on the hours that the city will accept sewage flow from the applicants;

(b) Restrictions may be placed on the amount of sewage flow or water provided to the applicant;

(c) For extensions outside the city's urban growth boundary area, the applicant shall have responsibility to maintain and operate its own facilities; and/or

(d) Any other conditions the council considers appropriate.

Section 2. Severability. If any section, sentence, clause or phrase of this ordinance should be held to be invalid or unconstitutional by a court of competent jurisdiction, such invalidity or unconstitutionality shall not affect the validity or constitutionality of any other section, sentence, clause or phrase of this ordinance.

PASSED by the City Council of the City of Stanwood this 3rd day of June, 2002.

CITY OF STANWOOD:

Matthew J. McCune, Mayor

ATTEST:

Lynda L. Jeffries, City Clerk

APPROVED AS TO FORM:

William M. Zingarelli, City Attorney

CITY OF STANWOOD
ORDINANCE 1126

AN ORDINANCE OF THE CITY OF STANWOOD, WASHINGTON, AMENDING CHAPTER 12.40 OF THE STANWOOD MUNICIPAL CODE CONCERNING WATER PLANT INVESTMENT CHARGES FOR THE 400 ZONE 1.0 MILLION GALLON ELEVATED RESERVOIR AND TRANSMISSION MAIN; AND THE CEDARHOME BOOSTER PUMP STATION.

WHEREAS, the City has adopted a Comprehensive Water Plan prepared by RH2 Engineering dated April 2002, and

WHEREAS, the Plan identifies certain capital facility improvements in the Cedarhome area to be funded by developers i.e. the 400 zone 1.0 million gallon elevated reservoir and transmission main; and Cedarhome booster pump station, and

WHEREAS, each property in the benefited area of the capital improvements should bear an equitable share of the cost of said improvements, and

WHEREAS, the estimated costs of the improvements as nearly as can be determined are $2,732,000;

NOW THEREFORE the City Council of the City of Stanwood do hereby ordain:

Section 1. Additional Water Plant Investment Charge for Cedarhome benefit area.

(a) The city council hereby finds and determines that the capital costs of water system improvements in the Cedarhome area are $2,732,000. Said water system improvements will be utilized by newly connecting properties in the Cedarhome benefit area and the capital cost for each three-quarter inch equivalent residential unit shall be $1,708.

(b) The Cedarhome benefit area is hereby defined as that area shown in Exhibit A-1, titled Cedarhome Benefit Area and Exhibit A-2, titled Cedarhome Benefit Area Tax Account Numbers.

(c) In addition to other fees imposed by ordinance or pursuant to agreements, there is herby imposed upon the properties in the Cedarhome benefit area seeking to obtain water service by connecting to the city's water system, a plant investment charge, determined by

multiplying the total number of equivalent water connections proposed by $1,708.

(i) Equivalent connections and plant investment charges for all nonresidential buildings shall be as follows:

Service Connection Size	Equivalent Connection	Charge
Up to 3/4"	1.00	$ 1,708
1"	1.75	2,989
1-1/2"	2.25	3,843
2"	2.75	4,697
3"	3.50	5,978
4"	6.50	11,102
6"	11.00	18,788
8"	16.00	27,328

(ii) Equivalent connections and plant investment charges for residential buildings (including hotels and motels) shall be as follows:

Number of Living Units	Connection Equivalent	Charge
1	1.00	$1,708
2	1.50	2,562
3	1.75	2,989
4	2.00	3,416
5	2.25	3,843
6	2.50	4,270
7	2.75	4,697
8	3.00	5,124
9	3.25	5,551
10	3.50	5,978

For each living unit above 10 in number equivalent connections shall be cumulatively increased by a multiplier of 0.05 (example: for 11 living units the equivalent connections would equal 3.5 X 1.05 or 3.675; therefore, the plant investment charge would by 3.675 X $1,708 or $6,277).

(d) All funds derived under this section shall be segregated from all other funds of the city. The entire portion of the water plant investment charge for the Cedarhome benefit area shall be used for no other purpose than installing and constructing the 400 zone 1.0 million gallon elevated reservoir and transmission main; and Cedarhome booster pump station or debt service thereon.

ADOPTED by the City Council and **APPROVED** by the Mayor this 5th day of August, 2002.

CITY OF STANWOOD

Matthew J. McCune, Mayor

APPROVED AS TO FORM:

William M. Zingarelli, City Attorney

ATTEST:

Lynda L. Jeffries, City Clerk

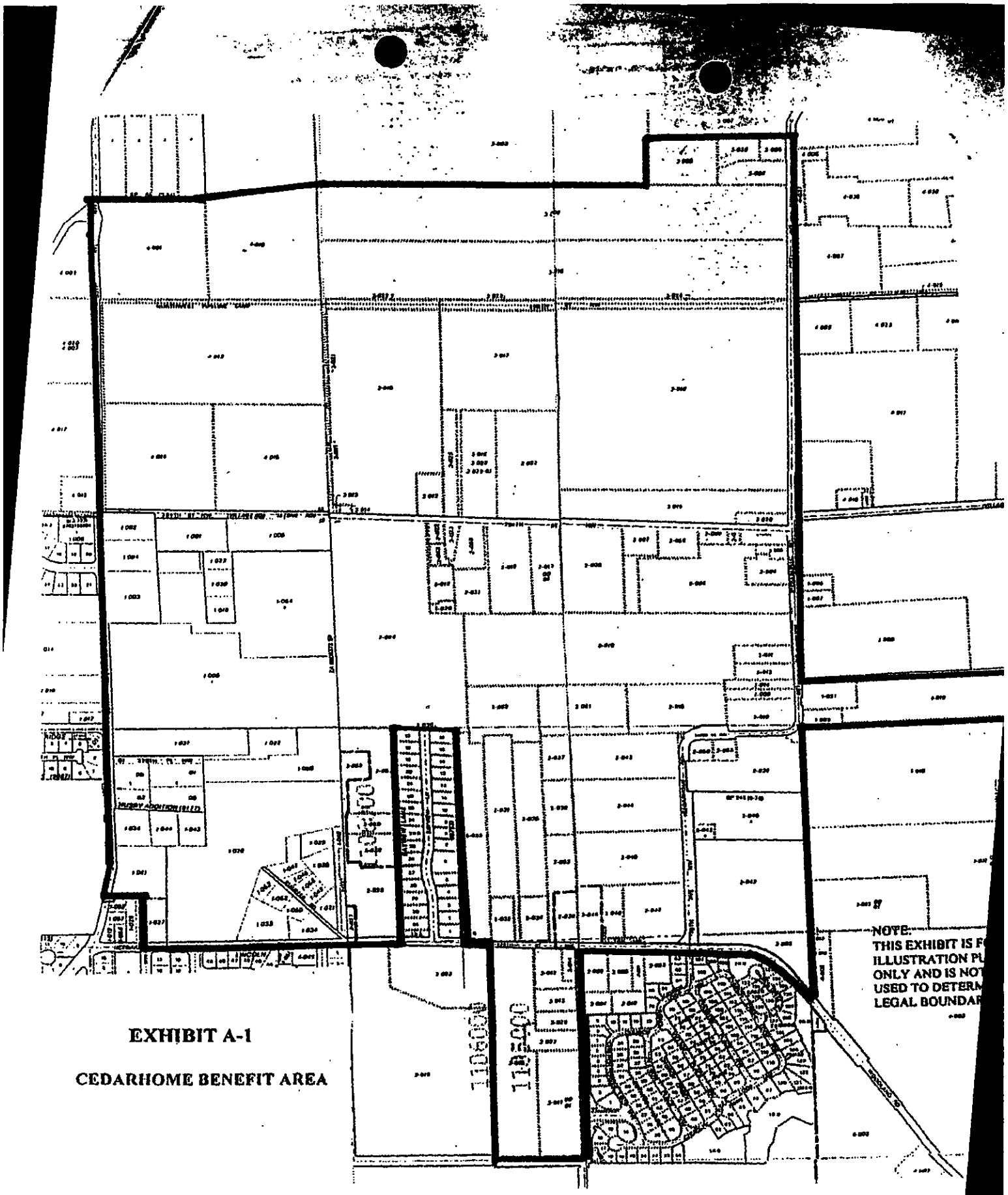

EXHIBIT A-1

CEDARHOME BENEFIT AREA

DARHOME BENEFIT AREA TAX ACCOUNT NUMBERS

9-32-04				20-32-04				20-32-04(CONT.)		
320419-	00-	1-002-00		320420-	00-	1-009-00		320420-	00-	2-045-00
320419-	00-	1-004-00		320420-	00-	1-019-00		320420-	00-	2-046-00
320419-	00-	1-003-00		320420-	00-	1-021-00		320420-	00-	2-048-00
320419-	00-	1-001-00		320420-	00-	2-024-00		320420-	00-	2-047-00
320419-	00-	1-005-00		320420-	00-	2-022-00		320420-	00-	3-002-00
320419-	00-	1-023-00		320420-	00-	2-019-00		320420-	00-	2-049-00
320419-	00-	1-020-00		320420-	00-	2-063-00		320420-	00-	2-042-00
320419-	00-	1-018-00		320420-	00-	2-023-00		320420-	00-	2-040-00
320419-	00-	1-084-00		320420-	00-	2-058-00		320420-	00-	2-039-00
320419-	00-	1-006-00		320420-	00-	2-021-00		320420-	00-	2-050-00
320419-	00-	1-021-00		320420-	00-	2-018-00		320420-	00-	2-055-00
320419-	00-	1-022-00		320420-	00-	2-017-00		320420-	00-	3-011-00
320419-	00-	1-050-00		320420-	00-	2-017-01		320420-	00-	3-011-01
320419-	00-	1-028-00		320420-	00-	2-008-00		320420-	00-	3-012-00
320419-	00-	1-024-00		320420-	00-	2-007-00		320420-	00-	3-013-00
320419-	00-	1-044-00		320420-	00-	2-056-00		320420-	00-	3-014-00
320419-	00-	1-043-00		320420-	00-	2-002-00		320420-	00-	3-015-00
320419-	00-	1-041-00		320420-	00-	2-003-00		320420-	00-	3-022-00
320419-	00-	1-027-00		320420-	00-	2-001-00		320420-	00-	3-025-00
320419-	00-	1-033-00		320420-	00-	2-006-00		320420-	00-	2-020-00
320419-	00-	1-034-00		320420-	00-	2-005-00		320420-	00-	2-030-00
320419-	00-	1-060-00		320420-	00-	2-004-00		320420-	00-	2-026-00
320419-	00-	1-062-00		320420-	00-	2-010-00				
320419-	00-	1-063-00		320420-	00-	2-062-00				
320419-	00-	1-047-00		320420-	00-	2-061-00		17-32-04		
320419-	00-	1-046-00		320420-	00-	2-015-00				
320419-	00-	1-055-00		320420-	00-	2-011-00		320417-	00-	3-005-00
320419-	00-	1-049-00		320420-	00-	2-012-00		320417-	00-	3-028-00
320419-	00-	1-031-00		320420-	00-	2-014-00		320417-	00-	3-008-00
320419-	00-	1-030-00		320420-	00-	2-009-00		320417-	00-	3-004-00
320419-	00-	1-029-00		320420-	00-	2-016-00		320417-	00-	3-009-00
320419-	00-	1-032-00		320420-	00-	2-059-00		320417-	00-	3-010-00
320419-	00-	1-048-00		320420-	00-	2-057-00		320417-	00-	3-022-00
006177-	000-	001-00		320420-	00-	2-060-00		320417-	00-	3-023-00
006177-	000-	001-01		320420-	00-	2-028-00		320417-	00-	3-024-00
006177-	000-	001-02		320420-	00-	2-027-00		320417-	00-	3-021-00
006177-	000-	002-00		320420-	00-	2-033-00		320417-	00-	3-011-00
006177-	000-	002-01		320420-	00-	2-031-00		320417-	00-	3-012-00
				320420-	00-	2-032-00		320417-	00-	3-014-00
				320420-	00-	2-034-00		320417-	00-	3-013-00
18-32-04				320420-	00-	2-035-00		320417-	00-	3-015-00
				320420-	00-	2-036-00		320417-	00-	3-017-00
320418-	00-	4-014-00		320420-	00-	2-037-00		320417-	00-	3-025-00
320418-	00-	4-015-00		320420-	00-	2-038-00		320417-	00-	3-016-00
320418-	00-	4-013-00		320420-	00-	2-052-00		320417-	00-	3-029-00
320418-	00-	4-001-00		320420-	00-	2-043-00		320417-	00-	3-029-01
320418-	00-	4-016-00		320420-	00-	2-044-00		320417-	00-	3-027-00
								320417-	00-	3-018-00
								320417-	00-	3-019-00
								320417-	00-	3-020-00

EXHIBIT A-2

7.6

CITY OF STANWOOD
Stanwood, Washington
ORDINANCE NO. 1189

An ordinance of the City of Stanwood adjusting rates to be charged for sewer, water, and drainage utility services, revising the utility billing policy, and amending section 12.40.020 and chapters 12.12, 12.16, and 12.20 of the Stanwood Municipal Code.

WHEREAS, the City Council has the authority to establish utility rates by ordinance, and

WHEREAS, the City Council has the authority to establish utility billing policy, and

WHEREAS, the City will incur debt to upgrade its water systems, and

WHEREAS, the City needs to adequately provide for future replacement of wastewater, water, and drainage infrastructure on an ongoing basis, and

WHEREAS, the City's utilities are expected to be financially self sufficient, and

WHEREAS, the City, by and through a qualified consultant, HDR Engineering, conducted a study and analysis of the City's rates and charges and the anticipated future needs of the water, sewer, and drainage utilities. A copy of said study dated April 20, 2006 is attached hereto and is incorporated by this reference as if fully contained herein, and

WHEREAS, on April 20, 2006 the Stanwood City Council held a public hearing to accept public comment concerning the proposed water, sewer, and drainage utility rates and plant investment charges,

NOW, therefore, be it ordained by the City Council of the City of Stanwood, Washington as follows:

That the rates and billing policies set forth below for sewer, water, and drainage service for all City of Stanwood utility customers shall be in effect until modified or amended by action of the City Council.

Section I – Sewer

SMC section 12.04.020 is hereby amended to read as follows:
12.04.020 Sewer rates.
For the furnishing of service to the users and potential users of the city sanitary sewage system, the rates and charges per month are established for the classifications indicated below:
(1) Definitions.
(a) "Base monthly charge" means the minimum charge to a user per month. For those users whose sewer charge is calculated based on water use, the base monthly charge includes water use up to the base monthly allowance.
(b) "Units" means the number of dwelling units in a multifamily residence such as a duplex, apartment or condominium; ~~or separate business units in a multibusiness complex;~~ or the number of separate rooms or living units in a nursing home, congregate care or assisted living facility; each having separate bathroom and/or kitchen facilities.
(c) "Incremental rate" means the dollar amount charged per 100 cubic feet of water use above the base monthly allowance and applies to those users whose sewer fee is calculated based on water use.
(d) "Sewer charge" means the dollar amount a user is charged for sewer service, calculated based on the sewer rates.
(e) "Sewer rate" means the dollar amount a user is charged for sewer service per unit of measure. For example, a sewer rate may be in terms of dollars per 100 cubic feet of water used, dollars per student, or other units.
(f) "Customer" means legal property owner at time of meter reading.
(g) "Account" means customer.

(2) Rates and Charges.
(a) Basis of Rates and Charges. Sewer charges shall be based on the monthly water use as recorded by the city water meters unless indicated otherwise in this section. The charge for residential uses for the summer months, defined herein as June, July, August and September for accounts in utility meter books 01, 02, 06, 07 and 09, and July, August, September and October for accounts in utility meter books 03, 04, 05 and 08, shall be based on the lesser of the water use for the billing period or the average monthly water use for the preceding October through May, or November through June, period, respectively. If data for the full October through May, or November through June, period are not available, the data will be averaged over the period for which data are available. For new accounts that begin in the defined summer months, the month's charge shall be based on the water use for that month. The charge for nonresidential uses for the months of June, July, August and September shall be based on the water use for that month unless indicated otherwise in this section. A user may elect, at his/her own expense, to install a separate water meter to measure water used

for irrigation. An irrigation-only account will then be established and billed separately by the city.

~~(b) Rate Schedule—Effective September 1, 2002.~~

~~Classification~~	~~Base Monthly Charge~~	~~Incremental Rate~~
~~Residential:~~		
~~Single family residences~~	~~$27.00~~	~~$1.35/100 cubic feet~~
~~Multifamily residences~~	~~$27.00 times the number of units~~	~~$1.35/100 cubic feet~~
~~Commercial:~~		
~~Light commercial~~	~~$31.05~~	~~$1.35/100 cubic feet~~
~~Heavy commercial~~	~~$60.75~~	~~$1.82/100 cubic feet~~
~~General industrial~~	~~$101.25~~	~~$2.84/100 cubic feet~~
~~Schools:~~		
~~Without kitchen and/or gym facilities~~	~~$31.05 plus $1.01 per student and staff~~	~~not applicable~~
~~With kitchen and/or gym facilities~~	~~$60.75 plus $1.01 per student and staff~~	~~not applicable~~
~~Other:~~		
~~Hotels and guest houses~~	~~$27.00 times the number of units~~	~~$1.35/100 cubic feet~~
~~Nursing home, congregate care, assisted living facility~~	~~$27.00 times the number of units~~	~~$1.35/100 cubic feet~~
~~Churches, meeting halls, etc.~~	~~$31.05~~	~~$1.35/100 cubic feet~~
~~All Other Uses (e.g., government, utilities, etc.)~~	~~$31.05~~	~~$1.35/100 cubic feet~~

~~(c) Rate Schedule—Effective January 1, 2003.~~

~~Classification~~	~~Base Monthly Charge~~	~~Incremental Rate~~
~~Residential:~~		
~~Single family residences~~	~~$29.20~~	~~$1.76/100 cubic feet~~
~~Multifamily residences~~	~~$29.20 times the number of units~~	~~$1.76/100 cubic feet~~
~~Commercial:~~		
~~Light commercial~~	~~$33.50~~	~~$1.76/100 cubic feet~~

~~Heavy commercial~~	~~$65.60~~	~~$2.15/100 cubic feet~~
~~General industrial~~	~~$109.40~~	~~$3.18/100 cubic feet~~
~~Schools:~~		
~~Without kitchen and/or gym facilities~~	~~$33.50 plus $1.11 per student and staff~~	~~not applicable~~

~~Classification~~	~~Base Monthly Charge~~	~~Incremental Rate~~
~~With kitchen and/or gym facilities~~	~~$66.80 plus $1.11 per student and staff~~	~~not applicable~~
~~Other:~~		
~~Hotels and guest houses~~	~~$29.20 times the number of units~~	~~$1.76/100 cubic feet~~
~~Nursing home, congregate care, assisted living facility~~	~~$29.20 times the number of units~~	~~$1.76/100 cubic feet~~
~~Churches, meeting halls, etc.~~	~~$33.50~~	~~$1.76/100 cubic feet~~
~~All Other Uses (e.g., government, utilities, etc.)~~	~~$33.50~~	~~$1.76/100 cubic feet~~

~~(d) Rate Schedule—Effective January 1, 2004.~~

~~Classification~~	~~Base Monthly Charge~~	~~Incremental Rate~~
~~Residential:~~		
~~Single family residences~~	~~$31.50~~	~~$2.28/100 cubic feet~~
~~Multifamily residences~~	~~$31.50 times the number of units~~	~~$2.28/100 cubic feet~~
~~Commercial:~~		
~~Light commercial~~	~~$36.20~~	~~$2.28/100 cubic feet~~
~~Heavy commercial~~	~~$70.80~~	~~$2.58/100 cubic feet~~
~~General industrial~~	~~$118.20~~	~~$3.56/100 cubic feet~~
~~Schools:~~		
~~Without kitchen and/or gym facilities~~	~~$36.20 plus $1.23 per student and staff~~	~~not applicable~~
~~With kitchen and/or gym facilities~~	~~$73.51 plus $1.23 per student and staff~~	~~not applicable~~
~~Other:~~		

~~Hotels and guest houses~~	~~$31.50 times the number of units~~	~~$2.28/100 cubic feet~~
~~Nursing home, congregate care, assisted living facility~~	~~$31.50 times the number of units~~	~~$2.28/100 cubic feet~~
~~Churches, meeting halls, etc.~~	~~$36.20~~	~~$2.28/100 cubic feet~~
~~All Other Uses (e.g., government, utilities, etc.)~~	~~$36.20~~	~~$2.28/100 cubic feet~~

~~(e)~~ (b) Rate Schedule. Effective January 1, 2005.

Classification	**Base Monthly Charge**	**Incremental Rate**
Residential:		
Single-family residences	$34.05	$3.00/100 cubic feet
Multifamily residences	$34.05 times the number of units	$3.00/100 cubic feet
Commercial:		
Light Commercial	$39.10	$3.00/100 cubic feet
Heavy commercial	$74.30	$3.20/100 cubic feet
General Industrial:	$124.10	$4.09/100 cubic feet
Schools:		
Without kitchen and/or gym	$39.10 plus $1.35 per student and staff	not applicable
With kitchen and/or gym facilities	$80.86 plus $1.35 per student and staff	not applicable
Other:		
Hotels and guest houses	$34.05 times the number of units	$3.00/100 cubic feet
~~Nursing home, congregate care, assisted living facility~~	~~$34.05 times the number of units~~	~~$3.00/100 cubic feet~~
Churches, meeting halls, etc.	$39.10	$3.00/100 cubic feet
All Other Uses (e.g., government, utilities, etc.)	$39.10	$3.00/100 cubic feet

(c) Rate Schedule. Effective January 1, 2009.

Classification	Base Monthly Charge	Incremental Rate
Residential:		
Single-family residences	$35.07	$3.09/100 cubic feet
Multifamily residences	$35.07 times the number of units	$3.09/100 cubic feet
Commercial:		
Light Commercial	$40.27	$3.09/100 cubic feet
Heavy commercial	$76.22	$3.30/100 cubic feet
General Industrial:	$127.72	$4.21/100 cubic feet
Schools:		
Without kitchen and/or gym facilities	$40.27 plus $1.39 per student and staff	not applicable
With kitchen and/or gym facilities	$83.29 plus $1.39 per student and staff	not applicable
Other:		
Hotels and guest houses	$35.07 times the number of units	$3.09/100 cubic feet
Churches, meeting halls, etc.	$40.27	$3.09/100 cubic feet
All Other Uses (e.g., government, utilities, etc.)	$40.27	$3.09/100 cubic feet

~~(f)~~ (d) Additional Information. The school population to be applied for calculation of the sewer charge shall be the number of full-time staff and student equivalents as reported by the school district for the month of October of each year. This population shall be used for the school year beginning November 1st and for the school year until new October data are available. Schools shall be charged only the base monthly charge for the months of June, July and August as long as the facility remains unoccupied and the water consumption reflects an inactive status.

~~(g)~~ (e) Sewer Service Outside the City Limits. Rates for services outside of the city limits of Stanwood shall be city rates as adopted, plus 45 percent.

(3) Base Monthly Allowances.

(a) The base monthly allowance shall be as follows:

Classification	Base Monthly Allowance
Residential:	
Single-family residences	600 cubic feet per month
Multifamily residences:	
Units individually metered	600 cubic feet per month

One water meter for all units	600 cubic feet per month times the number of units
Commercial:	
Light commercial	600 cubic feet per month ~~per business unit~~
Heavy commercial	600 cubic feet per month ~~per business unit~~
General industrial	600 cubic feet per month
Schools:	not applicable
Other:	
Hotels and guest houses	600 cubic feet per month times the number of units
~~Nursing homes, congregate care, assisted living facility~~	~~600 cubic feet per month times the number of units~~
Churches, meeting halls, etc.	600 cubic feet per month
All Other Uses (e.g., government, utilities, etc.)	600 cubic feet per month

(b) The following conditions apply to the base monthly allowances:

(i) Multifamily Residences. No modifications given for unoccupied units when multiple units are on a single meter.

~~(ii) Nonresidential Uses. For buildings with two or more commercial establishments that are not individually metered for water use, the allowable base monthly allowance for water use shall be the number of businesses times 600 cubic feet per month.~~

(4) Classification Descriptions.

(a) Single-Family Residences. This classification includes buildings for residential uses and includes detached homes intended for use by single families.

(b) Multifamily Residences. This classification includes structures containing more than one residence and includes uses such as duplexes, triplexes, multiplexes, nursing homes, congregate care, convalescent care, assisted living facilities, condominiums and apartments.

(c) Light Commercial. This classification includes commercial uses not otherwise classified. It incorporates simple domestic waste generators such as offices and small retail trade establishments.

(d) Heavy Commercial. This classification includes commercial uses that have higher potential for problem wastes (high strength, problem constituents or large volume) than the light commercial classification. The heavy commercial classification includes laundries, dry cleaners, restaurants, cafes, grocery stores, medical clinics, funeral homes, photo development, veterinary clinics, dental clinics, etc.

(e) General Industrial. This classification includes uses that generate large volumes of wastewater or have high strength or problem wastewater. This classification includes manufacturing and processing facilities, etc.

(f) Hotels and Guest Houses. This classification includes buildings used for sleeping purposes by guests (transient lodging) such as motels, inns, hotels, and bed and breakfast inns. No modifications will be given for unoccupied units.

~~(g) Nursing Homes/Convalescent Care/ Assisted Living Facility. This classification includes facilities used for occupation of and care of the elderly and/or disabled persons. No modifications will be given for unoccupied units.~~

~~(h)~~(g) Public/Institution. This classification includes government buildings, churches, meeting halls, school district administration offices unless they are situated within a school building, etc.

~~(i)~~(h) Schools. This classification includes education facilities. If school district administration offices are located within the same building as where education classes are conducted, such administration staff shall be counted as school staff for the sewage charge calculation.

~~(j)~~(i) Special. This classification is reserved for special cases that do not fit the other classes. The public works director shall determine whether a special classification and charge will apply and will recommend to city council such charges.

(5)~~(k)~~ Users with State Waste Discharge Permits, NPDES Permits or Pretreatment Agreements with the City. This classification includes businesses with a state waste discharge permit, NPDES permit or pretreatment agreement with the city. The monthly charge shall be based on the maximum amount of wastewater allowed by the permit or agreement unless a city-approved meter indicates a smaller amount was actually sent to the city's wastewater facilities. For businesses that do not yet have a permit or agreement, calculation of their charge shall be based on the most appropriate classification above.

(6)~~(l)~~ Users with High Strength Waste. The city shall have the right to charge an additional monthly sewer service charge for a high strength waste, which is defined herein as one with pollutant concentrations in excess of typical domestic wastewater. A surcharge is appropriate for waste strength conditions including, but not limited to, a total five-day biochemical oxygen demand and/or suspended solids concentration in excess of 300 milligrams per liter. The public works director will recommend to city council an appropriate monthly surcharge.

(7)~~(5)~~ Users with Multiple Classifications. In the event that any user of the city's sanitary sewage system, by the nature of its business, may fall within two or more of the above classifications, the rate for such user shall be the highest rate established for any such classification.

(8)~~(6)~~ Contract Rates. Rates for any user may be set by contract at the discretion of the city council. Users having their rates set by contract shall fall under this classification only during the duration of the contract term. Upon termination of said contract, the user will be charged under the other most applicable classification as determined by the ~~city clerk~~ finance director.

(9) Inactive Rates. An inactive rate is available to accounts where water consumption falls below 100 cubic feet per month for one continuous billing period or more. Inactive rates will only be available upon prior notice to the City. Inactive rates for all classifications shall be 50 percent of the minimum base monthly charge per classification.

Section II – Drainage

SMC chapter 12.12 is hereby amended to read as follows:
12.12.010 Revenue fund created.
There is created a special fund of the city to be known as the "drainage ~~revenue~~ fund." Any and all charges, assessments, and revenues received for drainage purposes, or from any rental, use, services or sale of property attributable to the operation and management of such utility, shall be credited to and paid into such fund.

12.12.020 Drainage rates and charges.
For the furnishing of the service to the users and potential users of the City drainage system, the rates and charges per month are established for the classifications indicated below:
(1) Definitions.
(a) "multiple business building" means one structure with multiple business units.
(b)"customer" means legal property owner at time of billing.
(c)"accounts" means customer.

~~The following rates and charges are established:~~
(2) Rates and charges effective July 1, 2006:

Classification	Monthly Rate
~~(1)~~ (a) Residential Use:	
~~(a)~~ (i) Single family residences including a lot or lots up to ~~20,000~~ 10,000 sq. ft. in area	~~$6.00~~ $8.10
(ii)Multifamily residences including land up to ~~20,000~~ 10,000 sq. ft. in area ~~for every four units,~~ per unit	~~$3.00~~ $4.05
~~(2)~~(b)Commercial Uses:	
~~(a)~~ (i) For each single or two-unit business building, including land up to ~~20,000~~ 10,000 sq. ft. in area	~~$9.00~~ $12.15
~~(b)~~(ii)For each ~~separately identifiable business unit within a~~ multi-business building, in excess of two units, including land up to 10,000 sq. ft: ~~(including land up to 20,000 sq. ft. in area for every four units),~~ per unit	~~$3.00~~ $4.05
~~(3)~~ (c)Land Areas Not Provided for in Subsections ~~1 or 2~~ a or b shall	

~~B~~be Charged as Follows:

~~(a)Unimproved Land:~~

~~For each 20,000 sq. ft. of land not improved with parking or other hard-surfaced facilities~~ ~~$ 1.50~~

~~(b)~~ (i)Improved Land:

For each 20,000 sq. ft. or part thereof of land improved with hard-surfaced parking lots, or other facilities or structures ~~$ 6.00~~ $8.10

(3) Rates and charges effective January 1, 2007:

Classification	Monthly Rate
(a) Residential Use:	
(i) Single family residences including a lot or lots up to 10,000 sq. ft. in area	$10.45
(ii)Multifamily residences including land up to 10,000 sq. ft. in area per unit	$ 5.20
(b)Commercial Uses:	
(i) For each single or two-unit business building, including land up to 10,000 sq. ft. in area	$15.65
(ii)For each multi-business building, in excess of two units, including land up to 10,000 sq. ft: per unit	$5.20
(c) Land Areas Not Provided for in Subsections a or b Shall be Charged as Follows:	
(i)Improved Land: For each 20,000 sq. ft. or part thereof of land improved with hard-surfaced parking lots, or other facilities or structures	$10.45

(4) Rates and charges effective January 1, 2008:

Classification	Monthly Rate
(a) Residential Use:	
(i) Single family residences including	

a lot or lots up to 10,000 sq. ft. in area	$12.25
(ii)Multifamily residences including land up to 10,000 sq. ft. in area per unit	$ 6.10
(b)Commercial Uses:	
(i) For each single or two-unit business building, including land up to 10,000 sq. ft. in area	$18.30
(ii)For each multi-business building, in excess of two units, including land up to 10,000 sq. ft.: per unit	$6.10
(c) Land Areas Not Provided for in Subsections a or b Shall be Charged as Follows:	
(i)Improved Land: For each 20,000 sq. ft. or part thereof of land improved with hard-surfaced parking lots, or other facilities or structures	$12.25

~~**12.12.030 Drainage of water other than precipitation.**~~
~~Any property owner who drains purchased water or any water other than precipitation into the city storm sewer or the Stillaguamish River drainage basin shall be charged a monthly rate at 100 percent of the water cost.~~

12.12.040 Connection fees, charges and costs.

(1) Applications for connection to the city storm sewer system shall be made to the city ~~clerk-treasurer~~ finance director who will collect fees and forward the application to the public works department for approval of the design and inspection of the proposed connection.

(2) A permit fee to cover the cost of administration, in the amount of $50.00, shall be charged for each application for city storm sewer service. Such fee shall be paid into the city general fund.

(3) A connection charge of $200.00 shall be charged for each separate residence, multiple housing unit, or business building~~, or separate business unit within a building~~ proposed to be served by a storm sewer. Such fee shall be paid into the drainage construction ~~reserve~~ fund.

(4) Construction Costs and Fees.

(a) The cost of construction of storm sewer lines from the public storm sewer shall in all cases be borne by such persons connecting thereto.

(b) Cost of construction of storm sewer mains by developers and others except in the case of an LID or ULID shall be directly borne by the party extending the storm sewer main.

(c) Cost of upgrading the drainage facilities, storm sewer trunk lines, or pumping facility or the cost of a consulting engineer shall be considered part of the cost of the storm sewer extension and such costs as determined by the public works director or consulting engineer shall be remitted to the city ~~clerk-treasurer~~ finance director or the work completed and accepted by the city prior to issuance of any connection.

(d) The city may at its option construct storm sewer mains to serve an area. Any property connecting to a storm sewer main constructed by the city shall be subject to the fees and charges under this section plus a pro rata share of the construction costs of the extension based on 50 percent square footage of the area served and 50 percent front footage of properties to be served unless 75 percent of the owners of property in the area to be served agree on another method of apportionment which shall be subject to the approval of the city.

(e) Any property connected to a storm sewer main or open ditch constructed under an LID or ULID shall be subject to a construction fee based upon the same square footage and front footage assessments made on the property within the LID.

~~(5) Billing. All charges for drainage shall be due and payable to the city clerk-treasurer on the first day of the month billing is made. The clerk-treasurer may, in the interest of economical operation, bill the drainage charges on the sanitary sewer statements for premises connected to the sanitary sewer. Premises not connected to the sanitary sewer shall be billed at the beginning of each calendar year. Charges for drainage remaining unpaid after the close of business on the tenth day of the month in which due shall be considered delinquent and if not paid by the twenty fifth day after the first day of such month shall be automatically subject to an additional charge as a penalty of one percent per month of such charges.~~

12.12.050 Permit required.

(1) It is unlawful for any person to make any connection with any public or private storm sewer without provisions of this chapter in relation thereto, unless a permit to do so from the public works director has been issued and is in force.

(2) Application for such permit shall be filed with the ~~clerk treasurer~~ public works director stating the name of the owner, the correct address and legal description of the property to be served, dimensions and locations of any buildings or hard-surfaced improvements on the property and the whole course of the private storm sewer from the public storm sewer or other outlets to its connection with the building or property to be served. The application shall be submitted to the public works director for approval, who may change or modify the same and designate the manner and place in which such sewer shall be connected with the public storm sewer, and he shall endorse his approval upon the application if the same is acceptable to him.

(3) Upon approval of the application the public works director shall issue for his records a permit card and storm sewer plan showing the size and location of the public storm sewer,

the point of connection, the location of any buildings on the lot and any other such information as may be available and required.
(4) Upon approval of the application and issuance of the permit it is unlawful to alter or to do any other work than is provided for in the permit.
(5) The public works director shall prepare and keep on file in his office all records of storm sewer connections showing the information obtained in the course of inspection of completed work done under the permit.
(6) The public works director may issue such a permit to the owner or occupant of any property to construct, extend, relay, repair or make connection to any public or private storm sewer or drainage channel provided such owner or occupant complies with the applicable provisions of this chapter.

~~12.12.060 Lien charges.~~
~~When charges for drainage are delinquent for a period in excess of six months, a lien shall be filed against the property and an additional charge in the amount of $25.00 shall be charged to cover the cost of processing the lien and filing fees. All charges for drainage together with any penalties and interest that may be provided by this chapter shall be a lien upon the property superior to all other liens and encumbrances whatsoever, except those for general taxes and local and special assessments. Such liens shall be enforced by the city in the manner provided by law.~~

12.12.070 Drainage fees and charges for property outside of the city.
When property outside of the city is served by storm sewers, drainage ditches, drainage channels or pumping facilities, charges for such drainage services, filing of liens or other fees or charges covered in this chapter shall be payable at the rate of 150 percent of the applicable charge or rate for service within the city.

12.12.080 Development fees.
At the time of application for a subdivision, short plat, planned unit development or binding site plan, a drainage assessment is to be submitted to the city clerk-treasurer in the amount of $400.00 plus $25.00 per lot. Such fee is to be credited to the drainage construction reserve fund for the improvement of drainage facilities.

12.12.090 Construction ~~reserve~~ fund created.
There is created a special fund of the city to be known as the "drainage construction ~~reserve~~ fund." Any and all development fees shall be credited and paid into such fund to provide for construction and improvement of drainage facilities.

Section III – Water

SMC chapter 12.16 is hereby amended to read as follows:
12.16.005 Definitions.
For the purposes of this chapter, the following definitions shall apply:

(1) "Quantity allowed" means the number of hundreds of cubic feet of water that may be consumed for the monthly minimum charge.
(2) "Overage" means the water that is consumed over the quantity allowed for each meter size in a month.
(3) "Low-income household" means a household in which the total annual income is below the very low income level for the Seattle/Everett area as established and amended by survey from time to time by the United States Department of Housing and Urban Development.
(4) "Senior citizen" means a person 62 years of age or older.
(5) "Disabled person" means a person with a physical or mental impairment that substantially limits one or more major life activities, such as walking, seeing, hearing, speaking, learning, performing manual tasks, caring for oneself, etc.
(6) "Inactive" means an account with ~~zero~~ less than 100 cubic feet water consumption for a ~~continuous period of 30 days or longer~~ one continuous billing period.
(7) "customer" means legal property owner at time of meter reading.
(8) "account" means customer".

12.16.010 Water service rates.
(1) For the furnishing of service to users and potential uses of the city water system, the rates and charges per month are established for the classifications indicated below.
(2) Water Service Rates – Metered Water. The following rates will be applied for monthly water service:

~~(a) Monthly Minimum Charges by Meter Size – Effective September 1, 2002.~~

~~Meter Size (inches)~~	~~Quantity Allowed (hundreds of cubic feet)~~	~~Monthly Minimum Base Charge~~
~~3/4~~	~~6~~	~~$ 10.87~~
~~1~~	~~10~~	~~19.71~~
~~1 1/2~~	~~20~~	~~34.45~~
~~2~~	~~40~~	~~63.93~~
~~3~~	~~80~~	~~100.12~~
~~4~~	~~150~~	~~150.17~~

~~(b) Charges for Consumption in Excess of the Quantity Allowed (by Hundreds of Cubic Feet) – Effective September 1, 2002.~~

~~(i) All amounts in excess of quantity allowed unless included in the monthly minimum base charge: $1.47 per 100 cubic feet from four to 50 hundreds of cubic feet.~~

~~(ii) All amounts in excess of 50 hundreds of cubic feet unless included in the monthly minimum base charge: $0.96 per 100 cubic feet in excess of 50 hundreds of cubic feet.~~

~~(c) Monthly Minimum Charges by Meter Size – Effective January1, 2003.~~

~~Meter Size (inches)~~	~~Quantity Allowed (hundreds of cubic feet)~~	~~Monthly Minimum Base Charge~~

~~3/4~~	~~6~~	~~$ 11.85~~
~~1~~	~~10~~	~~21.49~~
~~1-1/2~~	~~20~~	~~37.56~~
~~2~~	~~40~~	~~69.69~~
~~3~~	~~80~~	~~109.14~~
~~4~~	~~150~~	~~163.69~~

~~(d) Charges for Consumption in Excess of the Quantity Allowed (by Hundreds of Cubic Feet) – Effective January 1, 2003.~~

~~(i) All amounts in excess of quantity allowed unless included in the monthly minimum base charge: $1.59 per 100 cubic feet from four to 50 hundreds of cubic feet.~~

~~(ii) All amounts in excess of 50 hundreds of cubic feet unless included in the monthly minimum base charge: $1.20 per 100 cubic feet in excess of 50 hundred of cubic feet.~~

~~(e) Monthly Minimum Charges by Meter Size – Effective January 1, 2004.~~

~~Meter Size (inches)~~	~~Quantity Allowed (hundreds of cubic feet)~~	~~Monthly Minimum Base Charge~~
~~3/4~~	~~6~~	~~$ 12.80~~
~~1~~	~~10~~	~~23.21~~
~~1-1/2~~	~~20~~	~~40.56~~
~~2~~	~~40~~	~~75.26~~
~~3~~	~~80~~	~~117.87~~
~~4~~	~~150~~	~~176.78~~

~~(f) Charges for Consumption in Excess of the Quantity Allowed(by Hundreds of Cubic Feet) – Effective January 1, 2004.~~

~~(i) All amounts in excess of quantity allowed unless included in the monthly minimum base charge: $1.67 per 100 cubic feet from four to 50 hundreds of cubic feet.~~

~~(ii) All amounts in excess of 50 hundreds of cubic feet unless included in the monthly minimum base charge: $1.50 per 100 cubic feet in excess of 50 hundreds of cubic feet.~~

~~(g)~~(a)Monthly Minimum Charges by Meter Size – Effective January 1, 2005.

Meter Size (inches)	Quantity Allowed (hundreds of cubic feet)	Monthly Minimum Base Charge
3/4	6	$ 13.56
1	10	24.60
1-1/2	20	42.99
2	40	79.78
3	80	124.94

4	150	187.39

~~(h)~~(b) Charges for Consumption in Excess of the Quantity Allowed (by Hundreds of Cubic Feet) – Effective January 1, 2005.

(i) All amounts in excess of quantity allowed unless included in the monthly minimum base charge: $1.78 per 100 cubic feet from four to 50 hundreds of cubic feet.

(ii) All amounts in excess of 50 hundreds of cubic feet unless included in the monthly minimum base charge: $1.78 per 100 cubic feet in excess of 50 hundreds of cubic feet.

(c) Monthly Minimum Charges by Meter Size – Effective September 1, 2006.

Meter Size (inches)	Quantity Allowed (hundreds of cubic feet)	Monthly Minimum Base Charge
3/4	6	$ 14.21
1	10	24.60
1-1/2	20	47.32
2	40	79.78
3	80	137.63
4	150	213.77

(d) Charges for Consumption in Excess of the Quantity Allowed (by Hundreds of Cubic Feet) – Effective September 1, 2006.

(i) All amounts in excess of quantity allowed unless included in the monthly minimum base charge, shall be charged at $1.87 per each 100 cubic feet over the base quantity allowed.

(e) Monthly Minimum Charges by Meter Size – Effective January 1, 2007.

Meter Size (inches)	Quantity Allowed (hundreds of cubic feet)	Monthly Minimum Base Charge
3/4	6	$ 15.26
1	10	25.48
1-1/2	20	50.82
2	40	81.34
3	80	150.32
4	150	240.14

(f) Charges for Consumption in Excess of the Quantity Allowed (by Hundreds of Cubic Feet) – Effective January 1, 2007.

(i) All amounts in excess of quantity allowed unless included in the monthly minimum base charge, shall be charged at $2.00 per each 100 cubic feet over the base quantity allowed.

(g) Monthly Minimum Charges by Meter Size – Effective January 1, 2008.

Meter Size (inches)	Quantity Allowed (hundreds of cubic feet)	Monthly Minimum Base Charge

3/4	6	$ 16.37
1	10	27.34
1-1/2	20	54.51
2	40	87.25
3	80	163.01
4	150	266.52

(h) Charges for Consumption in Excess of the Quantity Allowed (by Hundreds of Cubic Feet) – Effective January 1, 2008.

(i) All amounts in excess of quantity allowed unless included in the monthly minimum base charge, shall be charged at $2.15 per each 100 cubic feet over the base quantity allowed.

(j) Monthly Minimum Charges by Meter Size – Effective January 1, 2009.

Meter Size (inches)	Quantity Allowed (hundreds of cubic feet)	Monthly Minimum Base Charge
3/4	6	$ 17.57
1	10	29.34
1-1/2	20	58.51
2	40	93.65
3	80	175.70
4	150	292.89

(k) Charges for Consumption in Excess of the Quantity Allowed (by Hundreds of Cubic Feet) – Effective January 1, 2009.

(l) All amounts in excess of quantity allowed unless included in the monthly minimum base charge, shall be charged at $2.31 per each 100 cubic feet over the base quantity allowed.

~~(i)~~(m) Water Service Outside the City Limits. Rates for services outside of the city of Stanwood shall be city rates as adopted, plus 45 percent.

(3) Conditions.

(a) In computation of bimonthly bills for service the monthly minimum base charge and the quantity allowed for each rate block shall be multiplied by two.

(b) When multiple dwelling units ~~or separate business units,~~ each having bathroom and/or kitchen facilities within a building, are served by a single meter connection, the minimum charge per month shall be the minimum monthly charge for a 3/4-inch meter times the number of dwelling ~~or business units~~ served by the single meter.

12.16.014 Low-income senior citizen and low-income disabled rates.

(1) Low-income senior citizens or low-income disabled persons who are customers of the utility shall be eligible to apply for water service at 70 percent of the monthly minimum charge, and full charge for all overage consumption.

(2) Low-income households in which the principal financial resources are provided by a senior citizen or a disabled person, as defined in this chapter, may apply for these

reduced rates. The city may require a customer who is receiving service at a reduced rate to provide information annually to confirm their continued eligibility for the reduced rate.

(3) The reduced rate provided by this section shall apply only to 3/4-inch single-family residential services.

12.16.016 Inactive rates.

An inactive rate is available to accounts where ~~no usage of water (zero consumption) is anticipated for a continuous period of 30 days~~ consumption falls below 100 cubic feet for one continuous billing period or more. Inactive rates will only be available upon prior notice to the city. Inactive rates for all meter sizes shall be at 50 percent of the 3~~/4 inch~~ minimum monthly base water charge by meter size.

12.16.020 Large seasonal users.

(1) Applicable to all users who:

(a) Consume more than 1,000,000 cubic feet per year; and

(b) Consume water at a rate of more than 100 gallons per minute (GPM); and

(c) Consume more than 20 percent of their annual water use in 30 consecutive calendar days.

(2) Demand Charge. Large seasonal users shall pay a demand charge. The demand charge shall be in accordance with the following formula:

~~(a) Effective September 1, 2002, Demand Charge – $1.27 x (peak day water use for 2001 in GPM).~~

~~(b) Effective January 1, 2003, Demand Charge – $1.39 x (peak day water use for 2002 in GPM).~~

~~(c) Effective January 1, 2004, Demand Charge – $1.50 x (peak day water use for 2003 in GPM).~~

~~(d)~~(a) Effective January 1, 2005, Demand Charge – $1.59 x (peak day water use for 2003~~4~~ in GPM).

(b) Effective September 1, 2006, Demand Charge – $1.67 x (peak day water use for 2005 GPM).

(c) Effective January 1, 2007, Demand Charge – $1.79 x (peak day water use for 2006 GPM).

(d) Effective January 1, 2008, Demand Charge - $1.92 x (peak day water use for 2007 GPM).

(e) Effective January 1, 2009, Demand Charge - $2.06 x (peak day water use for 2008 GPM).

(3) Consumption Charge.

In addition to the demand charge large seasonal users shall pay a consumption charge equal to:

~~(d)~~(a) Effective January 1, 2005, the annual average water consumption over the five previous calendar years divided by 12 times $1.21 per 100 cubic feet.

(b) Effective September 1, 2006, the annual average water consumption over the five previous calendar years divided by 12 times $1.27 per 100 cubic feet.
(c) Effective January 1, 2007, the annual average water consumption over the five previous calendar years divided by 12 times $1.36 per 100 cubic feet.
(d) Effective January 1, 2008, the annual average water consumption over the five previous calendar years divided by 12 times $1.46 per 100 cubic feet.
(e) Effective January 1, 2009, the annual average water consumption over the five previous calendar years divided by 12 times $1.57 per 100 cubic feet.

Any city utility tax is in addition to the above rates.

12.16.030 Fire hydrant service.

(1) Hydrant Use Fee. Persons drawing water from or utilizing city water from a hydrant shall pay a use fee of $50.00 per day.
(2) Rate per Month. Fire hydrants owned and maintained by the customer:

Each hydrant	$2.50 per month

12.16.040 Service connection charge.

(1) A permit fee to cover the cost of administration in the amount of $50.00 shall be charged for each application for city water service. Such fee shall be paid into the city general fund.
(2) Service Connection Charge. Each separate service connection shall pay a fee per meter size as follows:

3/4" or smaller	$600.00
1"	$700.00
1-1/2"	$2,000.00
2"	$2,500.00

Service connection charges for meters larger than two inches shall be determined by the public works director.

12.16.050 Fire Suppression Systems.

(1) Rate per month. Effective January 1, 2007, Buildings with installed fire suppression systems owned and maintained by the customer shall be billed at $2.50 per month.

Section IV – Utility Billing Policy

SMC chapter 12.20 is hereby amended to read as follows:

12.20.010 ~~Serving termination for nonpayment.~~

~~Whenever a property owner or user fails to pay the utility charges on a premises within 40 calendar days after the billing date, the city of Stanwood may cause the termination of water service to such premises upon reasonable notice to the owner and/or occupant. Utility charges that remain unpaid after 40 calendar days from the billing date shall be subject to a~~

~~late penalty charge of two percent~~.

Billing and payment policy.

(1) Bi-monthly billings shall be mailed to the address of the owner of the property being served by the utilities, as the address appears in the records of the city utility department. Upon written request of the owner, billing statements may be sent directly to the occupant of the property being served; however, in such cases the owner shall remain liable for payment of the bill, and the property shall remain subject to a lien for delinquent account.

(2) All payments on utility bills shall be applied first to the sewer balance, second to the drainage balance, and third to the water balance. Penalties and other charges are allocated proportionately to each utility.

(3) In the event that any fees or charges assessed for such services are not paid within 40 calendar days after mailing of the bills for such services, they shall be considered delinquent and shall automatically constitute a lien against the property to which the services were rendered.

12.20.020 ~~**Payment required before service restoration.**~~

~~Water service may not be restored to the premises until all utility billing charges due and owing have been satisfied, including interest and penalties on the unpaid balance.~~

Assessing fees and penalties for nonpayment and delinquency.

(1) Delinquency.

A utility account is considered delinquent when the customer or occupant receiving the service fails to pay the utility charges within 40 calendar days after the billing date. Termination of service does not relieve customer of the obligation to pay delinquent accounts and charges.

(2) Service restoration charge.

A turn-on charge of $25.00 shall be assessed to the property owner account at the time of request for restoration of water service.

(3) Late Penalty.

For each notice sent to a utility customer advising the customer that an account is delinquent or the utility service will be discontinued by reason of the delinquency, there shall be a late penalty charge added to the account of five percent of the unpaid balances.

The finance director, or his/her designee, is authorized to waive the late penalty charge under the following circumstances:

(i) Where a utility customer has made arrangements with the city, prior to the date the billing is due, for deferral of the payment of the bill, or

(ii) In such circumstances where, in the judgment of the finance director or his/her designee, the customer can demonstrate a bona fide economic hardship.

(4) Other fees and charges.

(i)If a utility account is dishonored by the drawer's bank by reason of insufficient funds, a surcharge of $20.00 shall be added to the utility account.

(ii)If a utility account is liened by reasons of nonpayment for up to four months, the customer shall be responsible for payment of all lien recording fees. These lien

charges shall be assessed on utility account balances.

12.20.030 ~~Service restoration charge.~~

~~A turn-on charge of $25.00 shall be paid by the property owner or user occupant at the time of request for restoration of water service.~~

Termination of Service.

Water service may be discontinued by the city for delinquent and unpaid charges as specified in SMC 12.20.020.

12.20.040 ~~Lien Rights.~~

~~Nothing in this chapter shall be construed as abridging the lien rights of the city of Stanwood, or other legally established sanctions.~~

Payment required before service restoration.

Water service may not be restored to the premises until all utility billing charges, as specified in SMC 12.20.020 due and owing have been satisfied.

12.20.050 Lien rights.

(1) Liens against the property for up to four months of unpaid charges, shall encumber the property, and shall be the obligation of the owner of the property, its heirs, successors, and assigns, until the same is paid in full. The city may enforce the lien by shutting off water services until all delinquent and unpaid charges are paid in full.

(2)Nothing in this chapter shall be construed as abridging the lien rights of the city of Stanwood, or other legally established sanctions.

12.20.060 Adjustments to bills.

(1) In the event a meter fails to register the correct amount of water used, the customer will be charged at the average rate of monthly consumption for the previous twelve months as shown by the meter when in working order.

(2) In the event a leak or failure of a private water system or private service between the meter and the structure located on private property results in excess consumption, the city may, through a determination of the city finance director, provide for a rate adjustment up to 50 percent of the volume consumed in any one billing period in excess of the bi-monthly average of water consumed over the previous twelve months at that service address.

(i)Customers shall be required to provide proof of repair to leak or failure prior to receiving any rate adjustment.

(ii) Application for the credit or adjustment must be made in written form and approved by the city finance director or his/her designee.

(iii) No more than one application for credit may be considered per service address in any twenty-four month period.

Section V – Severability.

If any section, subsection, sentence, clause, phrase or work of this ordinance should be held to be invalid or unconstitutional by a court of competent jurisdiction, such invalidity or

unconstitutionality thereof shall not affect the validity or constitutionality of any other section, subsection, sentence, clause, phrase or work of this ordinance.

ADOPTED by the City Council of the City of Stanwood this 1st day of June, 2006.

CITY OF STANWOOD:

Dianne White, Mayor

ATTEST:

Lynda L. Jeffries, City Clerk

APPROVED AS TO FORM:

Grant Weed, City Attorney

CITY OF STANWOOD
Stanwood, Washington
ORDINANCE NO. 1190

An ordinance of the City of Stanwood, Washington, amending sections 12.40.040, 12.40.045, and 12.40.050 of the Stanwood Municipal Code concerning Water, Sewer, and Drainage Plant Investment Charges.

WHEREAS, RCW 35.92.025 establishes the authority for the City to charge property owners seeking to connect to the City's utilities an equitable share of the cost, and

WHEREAS, the City has determined its net plant in service, allocable interest, and net outstanding debt, and

WHEREAS, the City has adopted a six year capital facilities plan as part of its comprehensive plan, and

WHEREAS, the City, by and through a qualified consultant, HDR Engineering, conducted a study and analysis of the City's rates and charges and the anticipated future needs of the water, sewer, and drainage utilities. A copy of said study dated April 20, 2006 is attached hereto and is incorporated by this reference as if fully contained herein, and

WHEREAS, on April 20, 2006 the Stanwood City Council held a public hearing to accept public comment concerning the proposed water, sewer, and drainage utility rates and plant investment charges,

NOW, therefore, be it ordained by the City Council of the City of Stanwood, Washington as follows:

That the rates set forth below for sewer, water, and drainage plant investment charges shall be in effect until modified or amended by action of the City Council.

Section I
SMC section 12.40.040 is hereby amended to read as follows:
12.40.040 Plant Investment Charge.
(1) Water Plant Investment Charge.
(a) The city council hereby finds and determines that the capital cost of the city's water system, including pumps, wells, distribution lines, reservoirs and rights-of-way~~, as of January 1, 2001, is $12,100,815~~ is $23,595,125. The capital cost of such system has been borne by the city and its water system users. Such water system will be utilized by newly connecting properties, and the capital cost, as applied to buildings presently served, is ~~$3,270~~ $7,060 per each three-quarter-inch water meter.

(b)Beginning ~~February 25, 2001~~ June 15, 2006, and thereafter, in addition to other fees imposed by ordinance or pursuant to agreements, there is hereby imposed upon the owners of property seeking to provide water service to their property by connecting to the city's water system, a plant investment charge, determined by multiplying the total number of equivalent water connections proposed by ~~$3,270~~ $5,200. Equivalent connections and plant investment charges for all ~~nonresidential~~ buildings shall be as follows:

Service Connection Size	Equivalent Connection	Charge
Up to 3/4"	1.00	$ 5,200
1"	1.67	8,684
1-1/2"	3.33	17,316
2"	5.33	27,716
3"	10.00	52,000
4"	16.67	86,684
6"	33.33	173,316
8"	53.33	277,453

~~(c) Equivalent connections and plant investment charges for residential buildings (including hotels and motels) shall be as follows:~~

~~Number of Living Units~~	~~Connection Equivalent~~	~~Charge~~
~~1~~	~~1.00~~	~~$3,270~~
~~2~~	~~1.50~~	~~4,905~~
~~3~~	~~1.75~~	~~5,723~~
~~4~~	~~2.00~~	~~6,540~~
~~5~~	~~2.25~~	~~7,358~~
~~6~~	~~2.50~~	~~8,175~~
~~7~~	~~2.75~~	~~8,993~~
~~8~~	~~3.00~~	~~9,810~~
~~9~~	~~3.25~~	~~10,628~~
~~10~~	~~3.50~~	~~11,445~~

~~For each living unit above 10 in number equivalent connections shall be cumulatively increased by a multiplier of 0.05 (example: for 11 living units the equivalent connections would equal 3.5 X 1.05 or 3.675; therefore, the plant investment charge would by 3.675 X $3,270 or $12,017.~~

(2) Sewer Plant Investment Charge.

(a) The city council hereby finds and determines that the capital cost of the city's sewer system, including pumps, collection pipelines, sewer treatment plant, and rights-of-way~~, as of January 1, 2001, is $9,563,874~~ is $23,321,044.
The capital cost of such system has been borne by the city and its sewer system users. Such sewer system will be utilized by newly connecting properties and the

capital cost, as applied to buildings presently served is ~~$3,552~~ $4,040, per each three-quarter-inch water meter.

(b)Beginning ~~February 25, 2001~~ June 15, 2006, and thereafter, in addition to other fees imposed by ordinance or pursuant to agreements, there is hereby imposed upon the owners of property seeking to provide sewer service to their property by connecting to the city's sewer system, a plant investment charge, determined by multiplying the total number of equivalent connections by ~~$3,552~~ $4,040. Equivalent connections and plant investment charges for all ~~nonresidential~~ buildings shall be as follows:

Service Connection Size	Equivalent Connection	Charge
Up to 3/4 "	1.00	$ 4,040
1"	1.67	6,746
1-1/2"	3.33	13,453
2"	5.33	21,533
3"	10.00	40,400
4"	16.67	67,347
6"	33.33	134,653
8"	53.33	215,453

~~(c) Equivalent connections and plant investment charges for residential buildings (including hotels and motels) shall be as follows:~~

~~Number of Living Units~~	~~Connection Equivalent~~	~~Charge~~
~~1~~	~~1.00~~	~~$ 3,552~~
~~2~~	~~1.50~~	~~5,328~~
~~3~~	~~1.75~~	~~6,216~~
~~4~~	~~2.00~~	~~7,104~~
~~5~~	~~2.25~~	~~7,992~~
~~6~~	~~2.50~~	~~8,880~~
~~7~~	~~2.75~~	~~9,768~~
~~8~~	~~3.00~~	~~10,656~~
~~9~~	~~3.25~~	~~11,544~~
~~10~~	~~3.50~~	~~12,432~~

~~For each living unit above 10 in number equivalent connections shall be cumulatively increased by a multiplier of 0.05 (example: for 11 living units the equivalent connections would equal 3.5 X 1.05 or 3.675; therefore, the plant investment charge would be 3.675 X $3,552 or $13,054.~~

(3) Drainage Plant Investment Charge.

(a) The city council hereby finds and determines that the capital cost of the city's drainage system, including pumps, collection pipelines and rights-of-way~~, as of January 2, 1991 is $391,004~~ is $3,270,401. The capital cost of such system has been borne by the city and its drainage system users. Such drainage system

will be utilized by newly ~~connecting~~ developed properties, and the capital cost, as applied to buildings presently served, is ~~$505.85~~ $600 per each ~~equivalent connection~~ equivalent unit.

~~(b) Beginning February 25, 2001, and thereafter, in addition to other fees imposed by ordinance or pursuant to agreements, there is hereby imposed upon the owners of property seeking to provide drainage service to their property by connecting to the city's drainage system a plant investment charge determined by multiplying the total number of equivalent connections by $405.00. Equivalent connections and plant investment charges for all nonresidential buildings shall be as follows:~~

~~charged on an equivalent residential unit basis per every 3,000 square feet of impervious area. Equivalent Residential Unit "ERU" equals 10,000 square feet of residential lot size multiplied by 30 percent impervious. (example: Lot size = 11,000; ERU = 10,000 x .30 = 3,300; Drainage Investment Fee = $ ---.)~~

~~Service Connection Size~~	~~Equivalent Connection~~	~~Charge~~
~~Up to 3/4"~~	~~1.00~~	~~$ 405~~
~~1"~~	~~1.75~~	~~708~~
~~1 1/2"~~	~~2.25~~	~~910~~
~~2"~~	~~2.75~~	~~1,113~~
~~3"~~	~~3.50~~	~~1,416~~
~~4"~~	~~6.50~~	~~2,630~~
~~6"~~	~~11.00~~	~~4,451~~
~~8"~~	~~16.00~~	~~6,474~~

(b) Beginning June 15, 2006, and thereafter, in addition to other fees imposed by ordinance or pursuant to agreements, there is hereby imposed upon the owners of property seeking to develop within the city limits a drainage plant investment charge determined by multiplying the total number of equivalent residential units (ERU) by $600.00.

Residential. An equivalent residential unit (ERU) is determined to be 3,000 square feet of impervious area. This is based on a lot size of up to 10,000 square feet. Plant investment charges for residential lots larger than 10,000 square feet, the ERU's will be calculated on the same basis as nonresidential development.

Nonresidential Development (includes Multi-family dwellings). Drainage Plant investment charges for nonresidential development shall be calculated based on the number of equivalent residential units of impervious area of the proposed development, including fractions thereof.

For example:

i) 5,500 square feet of impervious area/3,000 = 1.83 x $600 = $1,100

ii) 6,400 square feet of impervious area/3,000 = 2.13 x $600 = $1,278

~~(c) Equivalent connections and plant investment charges for residential buildings (including hotels and motels) shall be as follows:~~

~~Number of Living Units~~	~~Connection Equivalent~~	~~Charge~~
~~1~~	~~1.00~~	~~$ 405~~
~~2~~	~~1.50~~	~~607~~
~~3~~	~~1.75~~	~~708~~
~~4~~	~~2.00~~	~~809~~
~~5~~	~~2.25~~	~~910~~
~~6~~	~~2.50~~	~~1,012~~
~~7~~	~~2.75~~	~~1,113~~
~~8~~	~~3.00~~	~~1,214~~
~~9~~	~~3.25~~	~~1,315~~
~~10~~	~~3.50~~	~~1,416~~

~~For each living unit above 10 in number equivalent connections shall be cumulatively increased by a multiplier of 0.05 (example: for 11 living units the equivalent connections would equal 3.5 X 1.05 or 3.675; therefore, the plant investment charge would be 3.675 X $405.00 or $1,487)~~.

SMC section 12.40.045 is hereby amended to read as follows:
12.40.045 Additional water plant investment charge for Cedarhome benefit area.

(1) The city council hereby finds and determines that the capital costs of water system improvements in the Cedarhome area are $2,732,000. Said water system improvements will be utilized by newly connecting properties in the Cedarhome benefit area and the capital cost for each three-quarter inch ~~equivalent residential unit~~ water meter shall be ~~$1,708~~ $2,570.

(2) The Cedarhome benefit area is hereby defined as that area shown in Exhibit A-1, titled Cedarhome Benefit Area and Exhibit A-2, titled Cedarhome Benefit Area Tax Account Numbers, attached to ~~the~~ this ordinance ~~codified in this section~~ and incorporated by this reference.

(3) In addition to other fees imposed by ordinance or pursuant to agreements, there is hereby imposed upon the properties in the Cedarhome benefit area seeking to obtain water service by connecting to the city's water system, a plant investment charge, determined by multiplying the total number of equivalent ~~water~~ connections proposed by ~~$1,708~~ $2,570.

(a) Equivalent connections and plant investment charges for all ~~nonresidential~~ buildings shall be as follows:

Service Connection Size	Equivalent Connection	Charge
Up to 3/4"	1.00	$ 2,570
1"	1.67	4,292

1-1/2"	3.33	8,558
2"	5.33	13,698
3"	10.00	25,700
4"	16.67	42,842
6"	33.33	85,658
8"	53.33	137,058

~~(b) Equivalent connections and plant investment charges for residential buildings (including hotels and motels) shall be as follows:~~

~~Number of Living Units~~	~~Connection Equivalent~~	~~Charge~~
~~1~~	~~1.00~~	~~$1,708~~
~~2~~	~~1.50~~	~~2,562~~
~~3~~	~~1.75~~	~~2,989~~
~~4~~	~~2.00~~	~~3,416~~
~~5~~	~~2.25~~	~~3,843~~
~~6~~	~~2.50~~	~~4,270~~
~~7~~	~~2.75~~	~~4,697~~
~~8~~	~~3.00~~	~~5,124~~
~~9~~	~~3.25~~	~~5,551~~
~~10~~	~~3.50~~	~~5,978~~

~~For each living unit above 10 in number equivalent connections shall be cumulatively increased by a multiplier of 0.05 (example: for 11 living units the equivalent connections would equal 3.5 X 1.05 or 3.675; therefore, the plant investment charge would by 3.675 X $1,708 or $6,277.~~

(4) All funds derived under this section shall be segregated from all other funds of the city. The entire portion of the water plant investment charge for the Cedarhome benefit area shall be used for no other purpose than ~~installing and constructing~~ the design, installation, and construction of the 400 zone ~~1.0 million~~ 500 thousand gallon elevated reservoir and transmission main; and Cedarhome booster pump station or debt service thereon.

SMC section 12.40.050 is hereby to read as follows:

12.40.050 Review of rates.

The plant investment charges, as set forth in SMC chapter 12.40, will be adjusted annually based upon the *Engineering News-Record (ENR) Construction Cost Index (the 20-city average)*, for a period not to exceed five (5) years. This cost index tracks changes in construction costs for municipal construction projects. After five (5) years, or whenever the City's utility comprehensive plans or utility capital facility plans are updated and adopted by City Council, whichever occurs first, the plant investment charges should be re-evaluated based on asset value, projected capital projects, projected growth, interest, and inflation.

Section II - Severability
If any section, subsection, sentence, clause, phrase or work of this ordinance should be held to be invalid or unconstitutional by a court of competent jurisdiction, such invalidity or unconstitutionality thereof shall not affect the validity or constitutionality of any other section, subsection, sentence, clause, phrase or work of this ordinance.

ADOPTED by the City Council of the City of Stanwood this 1st day of June, 2006.

CITY OF STANWOOD:

Dianne White, Mayor

ATTEST:

Lynda L. Jeffries, City Clerk

APPROVED AS TO FORM:

Grant Weed, City Attorney

APPENDIX O

AGENCY REVIEW CORRESPONDENCE

STATE OF WASHINGTON
DEPARTMENT OF HEALTH
20435 72nd Ave. S., Suite 200, K17-12 • Kent, Washington 98032 -2358

March 5, 2010

KEVIN HUSHAGEN
STANWOOD WATER DEPARTMENT CITY OF
10220 270TH ST NW
STANWOOD WA 98292

RECEIVED BOTHELL
RH2 ENGINEERING INC.
JOB NO: STA 107.088.01.101

MAR 09 2010

ROUTE TO: MC
FILE:

RE: Stanwood Water Department, City of, ID# 83650
Snohomish County
Water System Plan - 2010
Submittal #10-0102

Dear Mr. Hushagen:

Thank you for submitting the Water System Plan (WSP) for the City of Stanwood (the City) received in this office on January 4, 2010. We have reviewed the plan and offer the following comments. These comments must be adequately addressed prior to approval of the WSP.

System Description

1. Please provide a Local Government Consistency Statement from Snohomish County for the unicorporated areas within the City's water service area.

Basic Planning Data

2. Please provide actual water use data for the year 2008 and 2009 (if available).

3. Future water demand projections begin in year 2008 to 2013. The City may wish to provide water demand forecast information that will cover the six year approval period for this water system plan, 2010 – 2016.

System Analysis

4. It appears that an average ADD per ERU of 231 gpd/ERU is being used to determine future capacity. Using an average value of an average does not provide much factor of safety, please comment.

5. The peak day demand that occurred on July 23, 2006 was a Sunday. Would you expect a substantial increase in total peak day demand due to greater usage by your commercial connections, if the peak residential use occurred on a work day?

6. Multi-family ERUs should be expressed as per unit, not per connection. This would likely result in a fraction of ERU per unit as multi-family units generally use less water than a single family residential unit. Comparing the multi-family ERUs per connection does not reflect the wide variability in the number of units that may be part of each connection. There also appears to be a wide variability in the usage per multi-family connection that may be attributed to vacant units – for example, in 2005, 60 connections accounted for only 13,960 gallons while in 2004, 57 connection accounted for 22,608 gallons. As much as possible, this value should reflect the difference in usage due to vacant units; this will likely result in a higher usage number per ERU.

7. It is not clear how the future projections per pressure zone were established; was a straight percentage increase applied or was each zone considered for the potential growth in that zone. Are there any pressure zones that are approaching build-out capacity (based on current zoning)? Was a straight percentage increase applied for the largest commercial/industrial users – Twin City Foods, Schenk Packing, and other large users?

8. In the supply analyses in Chapter 7, it appears that some of the supply/demand values are being double-counted or misallocated. For example, the available supply for transfer from the 297 zone PRV to the 125 zone (1,958 gpm in 2007) is greater than the total available supply to the 297 zone (1,950 gpm) from the sources.

9. Please provide additional details on the calculations of required storage volumes; more specifically, what flows was the equalizing storage component based on, is there a component of stand-by storage that is utilizing multiple source reductions, what is the volume of stand-by storage based on, does stand-by storage include any component specifically intended to supply the largest commercial/industrial uses, why is there no fire flow storage included in the 125 zone?

10. The policies in Chapter 5 indicate that individual wells may be installed on existing platted lots if it is unfeasible to provide a direct connection at the time of the request. Does this policy extend to multiple lot owners that are located near each other or to subdivisions where it might be unfeasible to provide a direct connection? Is there a situation where the city might want to install (or allow) a remote satellite system that would then be owned/operated by the city?

Water Use Efficiency Program (WUE)

11. Please address the issues raised in the January 12, 2010 letter from Department of Ecology. (Attached)

12. Please include a section in the WUE program that addresses the water supply characteristics of your sources. (Reference Chapter 3 and Appendix C of the WUE Guidebook for guidance on what to include in this part of your WUE program.)

Operation & Maintenance

13. I did not see a Stage 1 or Stage 2 Disinfection Byproducts monitoring plan in Appendix J. Please provide copies of your monitoring plan(s). Please also keep in mind that your Stage 2 IDSE Report must be submitted to us no later than July 1, 2010.

Chapter 9 – Water System Improvements

14. Please provide a schedule for implementing the incomplete elements of the Cross-Connection Control Program. Have any high-risk (Table 9) cross connection hazards been identified? If so, are they on a routine testing schedule?

15. During the pre-plan meeting and previous meetings between DOH and the City, we have discussed the potential for surface water influence on the Hatt Slough Springs source. It appears that very little to no information on the actual construction of the springs has been found either in our files or yours. We have recommended a sampling regimen to help the City rule out any surface water influence on the springs (HPC samples, MPA samples, etc.) Based on the outcome of this testing, you may want to consider adding in additional money during Hatt Slough Springs Study or Rehabilitation projects to cover any necessary improvements to the actual construction of the springs to prevent any potential surface water influence.

Financial Analysis

16. WAC 246-290-100(4)(j)(ii), requires that the water utility present a balanced operational budget. The City's Revenue Requirements Summary shows a deficit for the years 2013-2015.

17. Just an editing note, the Financial Analysis –Chapter 10, shows a Chapter 3 heading.

Other Documentation

18. The water system must meet the consumer input process outlined in WAC 246-290-100(8). Please include documentation of a consumer meeting discussing the WSP, prior to DOH approval of the WSP.

19. Prior to DOH approval, the City's governing body must approve and adopt the WSP. This is a new requirement resulting from the Municipal Water Legislation.

20. Please provide copies of any comments made by adjacent purveyors, along with your response to those comments.

We hope that you have found these comments to be clear, constructive and helpful in the development of your final draft WSP. We ask that you submit the revised WSP on or before May 4, 2010. In order to expedite the review of your revised submittal, please include a cover letter summarizing how each of the above comments was addressed in the revised WSP and where each response is located (i.e., page numbers, Appendices, etc.)

Regulations establishing a schedule for fees for review of planning, engineering and construction documents have been adopted (WAC 246-290-990). Please note that we have included an invoice in the amount of **$3705.00** for the review of the Water System Plan. This fee covers our cost for review of the initial submittal, plus the review of one revised document. Please remit your complete payment in the form of a check or money order within thirty days of the date of this letter to: **DOH, Revenue Section, and P.O. Box 1099, Olympia, WA 98507-1099.**

Thank you again for submitting your revised Water System Plan for our review. If you have any comments or questions concerning our review, please contact me at (253) 395-6771.

Sincerely,

Richard Rodriguez

Richard Rodriguez
WSDOH Regional Planner

cc: Jolyn Leslie, DOH
Doug Wood, DOE-NWRO
Gary Idleburg, Snohomish County Planning and Development Services
Snohomish County Health District
Michele Campbell, P.E., RH2 Engineering, Inc.

RECEIVED
JAN 14 2010
DEPARTMENT OF HEALTH
NW DRINKING WATER

STATE OF WASHINGTON
DEPARTMENT OF ECOLOGY
Northwest Regional Office • 3190 160th Ave SE • Bellevue, WA 98008-5452 • 425-649-7000
711 for Washington Relay Service • Persons with a speech disability can call 877-833-6341

January 12, 2010

Richard Rodriguez
Regional Planner
Department of Health
20435 72nd Avenue South, Suite 200
Kent, WA 98032

Dear Mr. Rodriguez:

Thank you for the opportunity to review the City of Stanwood's 2009 Water Comprehensive Plan. Consistent with the Memorandum of Understanding between the Department of Ecology (Ecology) and the Department of Health, I have reviewed the relevant portions of the Water System Plan (WSP) and offer the following comments.

Water Right Self Assessment

Differences were found between Ecology records and the Water Rights assessment in Table 6-1 of the WSP. This is in part due to Certificate of Groundwater Right 509 (G1-*00695S; 250 gpm, 17 afy) not having been included in the Water Right Self Assessment (WRSA). Differences were also noted in Ecology records for Permit 4111.

Table 1: Stanwood Water Rights Assessment (Compare with WRSA Table 6-1)

File #	Cert #	Source	Priority Date	Qi (gpm)	Qa_A[1] (afy)	Qa_{NA} (afy)	WRSA
G1-*00605S	509	East Stanwood Well	5/1/1918	250	17		
S1-*02432C	1164	Hall Slough Springs	9/28/1928	1,122[2]	1,810[3]		Primary
G1-*00741C	615	Bryant Wells 1 & 2	2/20/1948	2,000	2,400		Primary
G1-*01067C	616	Fure Well	2/11/1949	150	121		Primary
G1-*04239P	4111	Cedarhome Well	3/6/1956	600	960[4]		Primary
			Total	**4,122**	**5,308**		

[1] Qa_A/Qa_{NA}: Annual Quantity (A=Additive; NA=Non-Additive)
[2] Certificate issued for 2.5 cfs
[3] Not quantified on certificate, but limited by Qi to 1,810 afy.
[4] Permit 4111 originally issued for 1,000 gpm and 1,600 afy with Qa non-additive w.r.t. to certificates 509, 615, 616, and 1164. In 2002 quantities were reduced when certificate 2986 (G1-*04239C) was rescinded back to permit status by Order DE 01WRNR-3410. A 2002 ROE for Change to Permit 4111 determined that the cancellation of permits 487 (GW) and 4416 (SW) with additive quantities of 216 and 1720 afy respectively, thus exceeding the Qa of Permit 4111, effectively made this quantity additive.

The WRSA total has the Qi and Qa of Permit 4111 (G1-*04239P) as 500 gpm and 807 afy. While these lower numbers are consistent with the 2002 Report of Examination for Change to Certificate 2986 (G1-*04239C) they do not conform to Ecology Order DE 01WRNR-3410, which rescinded the original certificate back to permit status due to errors associated with its issuance in 1958. Upon review of Ecology's files, the previously issued order (February 2002) is deemed to have the correct quantities.

Current and Future Demand

The quantities represented in the City of Stanwood's water right portfolio appear to be sufficient to satisfy projected growth out to 2027.

Watershed Plan

A Watershed plan has not been developed for the Stillaguamish (WRIA 5) watershed, within which the City of Stanwood is situated.

Thank you again for the opportunity to review the City of Stanwood WSP. Please contact me at (425) 649-7077 or at Doug.Wood@ecy.wa.gov if you have questions regarding this review or need additional information.

Sincerely,

Douglas H. Wood, MS, LHG
Water Resource Program

dw/mc

Michele Campbell

From: Bullington, Andrew [Andrew.Bullington@Ci.stanwood.wa.us]
Sent: Tuesday, January 19, 2010 9:58 AM
To: Michele Campbell
Cc: Hushagen, Kevin
Subject: Fw: Comments Received on City of Stanwood 2009 Draft Comprehensive Water System Plan

FYI
Andrew P. Bullington
Public Works Director
City of Stanwood
360 629-9781 Ext 1

From: Soine, Candice
To: Bullington, Andrew
Cc: Stenstrom, Clarissa; Ritz, Crilly; Soine, Candice; Terwilleger, Debbie; McCormick, Douglas; McEwen, Robert; Bloodgood, Jim; Hull, Fran; Scalf, Roy; Martinez, Dawn
Sent: Tue Jan 19 09:28:48 2010
Subject: Comments Received on City of Stanwood 2009 Draft Comprehensive Water System Plan
Andrew Bullington, Director
Public Works
City of Stanwood

Snohomish County Public Works has reviewed the proposed City of Stanwood Comprehensive Water System Plan. At this time, we have no comments.

We will be waiting for the issuance of the Final Comprehensive Water System Plan for our final review and issuance of the required letter by the Snohomish County Engineer.

Thank you for the opportunity to review this plan.

Candice Soine, Environmental Review Coordinator
Snohomish County Public Works
TES - Environmental Services
3000 Rockefeller, 5th Floor Admin West
Everett, WA 98201

(425) 388-3488 extension 4259
candice.soine@co.snohomish.wa.us

Memorandum

January 20, 2010

To: Candice Soine

From: Arthur Lee and Ann Bylin

Cc: Debbie Terwilleger

Re: Request for Review – City of Stanwood Comprehensive Water System Plan

We have reviewed the City of Stanwood Comprehensive Water System Plan (Water System Plan) and the SEPA DNS.

The review period for the SEPA DNS is over; however, we note that the project is entitled "City of Stanwood Comprehensive 2009 Water System Plan," on the DNS, but the project description in the DNS is for a sewer system plan. The checklist provided with the DNS appears to be oriented toward a sewer system plan environmental analysis. However, the checklist provided with the Water System Plan itself, as Appendix E (copy attached) appeared to be on the Water System Plan.

The Water System Plan states that there are sufficient water rights for current and projected water demand. However the water system capacity may need to be expanded with the replacement of one of its wells (Bryant Well No. 2, water right G1-00741CWRIS) by 2020 or earlier.

The plan also notes the City intends to transfer residual water rights (100 gpm instantaneous demand and 153 ac-ft annual use) from an existing well (Sill Well, water right CG1-04239CWRIS) to the new Cedarhome Well (water right CG1-04239), if the Department of Ecology is satisfied that the transfer will not result in seawater intrusion. The City has retained a consultant to assist in this determination. Surface Water will be interested in reviewing the determination for the transfer of water right form Sill Well to Cedarhome Well.

The Department of Health in 2004 determined that the Bryant Wells are in hydraulic continuity with Church Creek. Church Creek has been identified as a lowflow stream in the Stillaguamish Watershed Chinook Salmon Recovery Plan. Further withdrawals may impact flows in this basin. If groundwater extracted from the Bryant or Cedarhome Wells in the Church Creek basin is exported outside of the Church Creek basin, there could be further impacts to flows and recharge of groundwater.

The Stillaguamish River is under an instream flow rule (Chapter 173-505 WAC – Instream Resources Protection Program Stillaguamish River Basin – WRIA 5). The instream flow rule does not affect senior water rights that were issued before September 26, 2005. The water rights for the Stanwood water system sources all have issue dates

before 2005 and do not appear to be affected by the rule. However, the expansion of the service area to be served by the City of Stanwood may impact how and where the Stillaguamish Instream Flow Rule reservation of groundwater for exempt wells is allocated.

The system water demand has been relatively steady since 1993 while population doubled over the same period. According to the Water System Plan, this has been most likely the result of water use efficiency practices, including new buildings with low flow plumbing fixtures and the repair of water system leaks.

Future projected population, however, will increase water demand. With the adoption of this Water System Plan, the City of Stanwood will effectively expand the water right place of use to include the entire service area outlined in the 1991 North County Coordinated System Plan in accordance with Municipal Water Law 2003. Currently there is a limited area of retail use as identified in the plan.

The Water System Plan includes proposed improvements over a 20-year schedule to water mains, pressure zones, pressure reducing stations, facilities, and miscellaneous improvements. Miscellaneous improvements include the water use efficiency program, cross-connection control program, wellhead protection program, and comprehensive water system plan update.

The short-term surface water related impacts of the proposed improvements will tend to involve the typical construction runoff impacts, which can be mitigated through appropriate best management practices for erosion, sediment, and source controls. The Water System Plan proposes improvements over the next 20 years to serve projected needs within existing water rights. Environmental and habitat concerns will need to be considered, monitored, and addressed as needed over the long term.

Thank you for the opportunity to review.

Attachment:
Appendix E of Water System Plan (SEPA documents)